DENISON HYDRAULICS
vane pumps : single, double & triple
General catalog
T7 - T67 - T6C series

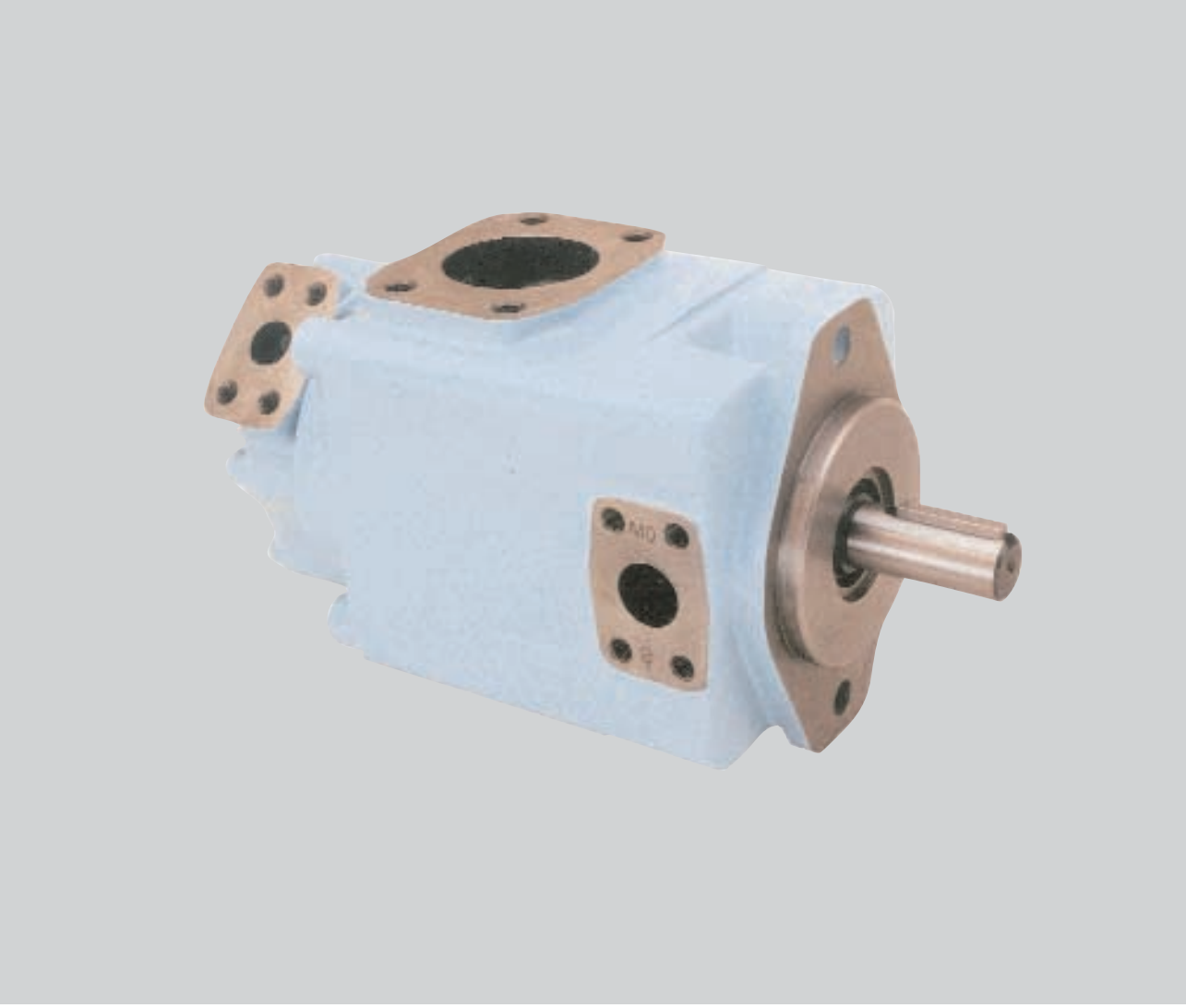

Publ. 1 - AM0740 - C 10 / 2003 / FB Replaces : 1 - AM0740 - B L14 - 10740 - 3

DENISON Hydraulics

Back To The Table Of Content

GENERAL

General characteristics 4
Minimum and maximum speeds - Pressure ratings - Single pumps 5
Minimum and maximum speeds - Pressure ratings - Double & triple pumps 6
Minimum allowable inlet pressure 7
Main calculation 8
Intermittent pressure rating 8
Description 9
Start-up instructions & recommendations
General 10
Shaft & coupling data 11
Specific point 11
Fluids . . . . 11 - 12
Formulas 12
General characteristics 13

SINGLE

T7B - T7BS
Ordering code and technical data 14
Dimensions and operating characteristics 15

T6C
Ordering code and technical data 16
Dimensions and operating characteristics 17

T7D - T7DS
Ordering code and technical data 18
Dimensions and operating characteristics 19

T7E - T7ES
Ordering code and technical data 20
Dimensions and operating characteristics 21

DOUBLE

T7BB - T7BBS
Ordering code and technical data 22
Dimensions and operating characteristics 23

T6CC
Ordering code and technical data 24
Dimensions and operating characteristics 25

T67CB
Ordering code and technical data 26
Dimensions and operating characteristics 27

T7DB - T7DBS
Ordering code and technical data 28
Dimensions and operating characteristics 29

T67DC
Ordering code and technical data 30
Dimensions and operating characteristics 31

T7DD - T7DDS
Ordering code and technical data 32
Dimensions and operating characteristics 33

Back To The Table Of Content

DOUBLE

T7EB - T7EBS

Ordering code and technical data 34
Dimensions and operating characteristics 35

T67EC

Ordering code and technical data 36
Dimensions and operating characteristics 37

T7ED - T7EDS

Ordering code and technical data 38
Dimensions and operating characteristics 39

T7EE - T7EES

Ordering code and technical data 40
Dimensions and operating characteristics 41

TRIPLE

T67DBB

Ordering code and operating characteristics 42
Technical data 43
Dimensions 46

T67DCB

Ordering code and operating characteristics 44
Technical data 45
Dimensions 46

T67DCC

Dimensions 47
Ordering code and operating characteristics 48
Technical data 49

T7DDB - T7DDBS

Ordering code and operating characteristics 50
Technical data 51
Dimensions 52

T67DDCS

Dimensions 53
Ordering code and operating characteristics 54
Technical data 55

T7EDB - T7EDBS

Ordering code and operating characteristics 56
Technical data 57
Dimensions 58

T67EDC - T67EDCS

Dimensions 59
Ordering code and operating characteristics 60
Technical data 61

Porting diagrams for double and triple pumps 62
Porting diagrams for triple pumps . . . . . 62 - 63

Back To The Table Of Content

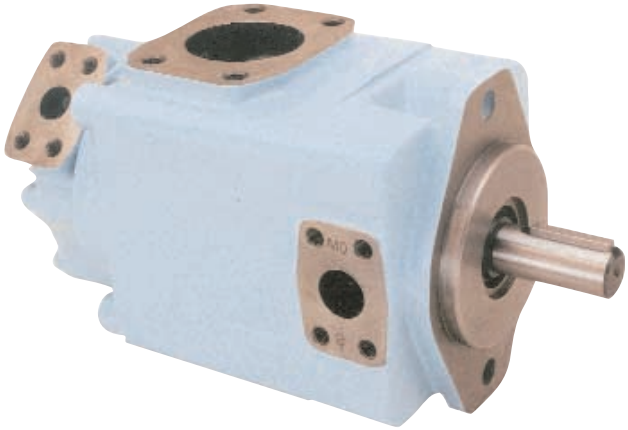

CHARACTERISTICS

These vane pumps have been specially designed for high/low circuit. The combination of different cartridges in double and triple pumps allows low flow at high pressure (300 bar max.) and high flow at lower pressure. This is a clever way to optimize your circuit design.
This pump feature will also allow a very fast pressure cycle change with a very precise flow repeatability.

GREATER FLOW

B : .35 to 3.05 in^3/rev.
C : .66 to 6.10 in^3/rev.
D : 2.68 to 9.64 in^3/rev.
E : 8.07 to 16.40 in^3/rev.

HIGHER PRESSURE

B : 4650 PSI max. (4350 PSI for multiple pump).
C : 4000 PSI max.
D : 4060 PSI max. (3500 PSI for multiple pump).
E : 3500 PSI max.

WIDE SPEED RANGE

Industrial pumps : from 600 to 3600 RPM

BETTER EFFICIENCY

Over 94 % under high pressure, which increases productivity and reduces heating and operation costs.

LOW NOISE LEVELS

Increase operator safety and acceptance.

MOUNTING FLEXIBILITY

Single pumps : 4 positions.
Double pumps : 32 positions.
Triple pumps : 128 positions.

CARTRIDGE DESIGN

Provides for drop-in assemblies. They permit easy conversion and service.
B and D cartridges : bi-directional
C and E cartridges : Uni-directional.

WIDE RANGE OF ACCEPTABLE VISCOSITIES

Viscosities from 3900 to 60 SUS permit colder starts and hotter running. The balanced design compensates for wear and temperature changes. At high viscosity or cold temperature, the rotor to side plates gap is well lubricated and improves mechanical efficiency.

FIRE RESISTANT FLUIDS AND BIODEGRADABLE FLUIDS

Including phosphate esters, organic esters, chlorinated hydrocarbons, water glycols, rapeseed may be pumped at higher pressures and with longer service life by these pumps.

GENERAL APPLICATIONS INSTRUCTIONS

1. Check speed range, pressure, temperature, fluid quality, viscosity and pump rotation.
2. Check inlet conditions of the pump, if it can accept application requirement.
3. Type of shaft : if would support operating torque.
4. Coupling must be chosen to minimize pump shaft load (weight, misalignment).
5. Filtration : must be adequate for lowest contamination level.
6. Environment of pump : to avoid noise reflection, pollution and shocks.

Back To The Table Of Content

Model of pump	Displ.	Theoretical Displacement Vi	Minimum speed	Maximum speed		Maximum pressure					
				HF-0, HF-1 HF-2	HF-3, HF-4 HF-5	HF-0, HF-2		HF-1, HF-4, HF-5		HF-3	
						Int.	Cont.	Int.	Cont.	Int.	Cont.
		in^3/rev	RPM	RPM	RPM	PSI	PSI	PSI	PSI	PSI	PSI
T7**B** T7**B**S	B02	.35	600	3600	1800	4650[1]	4200	3500	3000	2500	2000
	B03	.60									
	B04	.78									
	B05	.97									
	B06	1.21									
	B07	1.37									
	B08	1.52									
	B09	1.71									
	B10	1.94									
	B11	2.13		3000		4350	4000				
	B12	2.50									
	B14	2.75									
	B15	3.05				4060	3500				
T6**C**	003	.66	600	2800	1800	4000	3500	3000	2500	2500	2000
	005	1.05									
	006	1.30									
	008	1.61									
	010	2.08									
	012	2.26									
	014	2.81									
	017	3.56									
	020	3.89									
	022	4.29									
	025	4.84		2500							
	028	5.42				3000	2300		2300		
	031	6.10									
T7**D** T7**D**S	B14	2.68	600	3000	1800	4350	3600	3500	3000	2500	2000
	B17	3.36									
	B20	4.03									
	B22	4.29									
	B24	4.95									
	B28	5.49									
	B31	6.05									
	B35	6.92		2800		4060					
	B38	7.36									
	B42	8.39		2500		3770	3400				
	045[2]	8.89		2200		3500	3000	3000	2500		
	050[2]	9.64				3000	2300		2300		
T7**E** T7**E**S	042	8.07	600	2200	1800	3500	3000	3000	2500	2500	2000
	045	8.70									
	050	9.67									
	052	10.00									
	054	10.43									
	057	11.18									
	062	12.00									
	066	13.00									
	072	13.86									
	085	16.40		2000		1300	1100	1100	1100	1100	1100

HF-0, HF-2 = Anti-wear petroleum base.
HF-1 = Non anti-wear petroleum base.
HF-5 = Synthetic fluids.
HF-3 = Water-in-oil invert emulsions.
HF-4 = Water glycol solutions.

[1] Please consult DENISON Hydraulics for application over 4350 PSI.

[2] Ten vane technology.

For further information or if the performance characteristics outlined above do not meet your own particular requirements, please consult your local DENISON Hydraulics office.

Back To The Table Of Content

Model of pump	Displ.	Theoretical Displacement Vi	Minimum speed	Maximum speed		Maximum pressure					
				HF-0,HF-1 HF-2	HF-3,HF-4 HF-5	HF-0, HF-2		HF-1, HF-4, HF-5		HF-3	
						Int.	Cont.	Int.	Cont.	Int.	Cont.
		in^3/rev	RPM	RPM	RPM	PSI	PSI	PSI	PSI	PSI	PSI
T7**BB**/S T67C**B** T7D**B**/S T7E**B**/S T67D**BB** T67DC**B** T7DD**B**/S T7ED**B**/S	B02	.35	600	2200 [3]	1800	T7BB T7BBS 4650[1] Other pumps 4350	T7BB T7BBS 4200 Other pumps 4000	3500	3000	2500	2000
	B03	.60									
	B04	.78									
	B05	.97									
	B06	1.21									
	B07	1.37									
	B08	1.52									
	B09	1.71									
	B10	1.94									
	B11	2.13									
	B12	2.50									
	B14	2.75									
	B15	3.05				4060	3500				
T6**CC** T67**C**B T67D**C** T67E**C** T67D**C**B T67D**CC** T67DD**C**S T67ED**C**/S	003	.66	600	2200 [3]	1800	4000	3500	3000	2500	2500	2000
	005	1.05									
	006	1.30									
	008	1.61									
	010	2.08									
	012	2.26									
	014	2.81									
	017	3.56									
	020	3.89									
	022	4.29									
	025	4.84									
	028	5.42				3000	2300		2300		
	031	6.10									
T7**D**B/S T67**D**C T7**DD**/S T7E**D**S T67**D**BB T67**D**CB T67**D**CC T7**DD**B/S T67**DD**CS T7E**D**B/S T67E**D**C/S	B14	2.68	600	2200 [3]	1800	3630	3000	3500	3000	2500	2000
	B17	3.36									
	B20	4.03									
	B22	4.29									
	B24	4.95									
	B28	5.49									
	B31	6.05									
	B35	6.92									
	B38	7.36									
	B42	8.39									
	045[2]	8.89						3000	2500		
	050[2]	9.64				3000	2300		2300		
T7**E**B/S T67**E**C T7**E**DS T7**EE**/S T67**E**DB/S T67**E**DC/S	042	8.07	600	2200 [3]	1800	3500	3000	3000	2500	2500	2000
	045	8.70									
	050	9.67									
	052	10.00									
	054	10.43									
	057	11.18									
	062	12.00									
	066	13.00									
	072	13.86									
	085	16.40				1300	1100	1100	1100	1100	1100

HF-0, HF-2 = Anti-wear petroleum base.
HF-1 = Non anti-wear petroleum base.
HF-5 = Synthetic fluids.
HF-3 = Water-in-oil invert emulsions.
HF-4 = Water glycol solutions.

[1] Please consult DENISON Hydraulics for application over 4350 PSI.

[2] Ten vane technology.

[3] Please consult DENISON Hydraulics with higher speeds.

For further information or if the performance characteristics outlined above do not meet your own particular requirements, please consult your local DENISON Hydraulics office.

Back To The Table Of Content

Cartridges		Speed RPM										Displ.
Sizes	Displ.	1200	1500	1800	2100	2200	2300	2500	2800	3000	3600	
B	B02	11.6	11.6	11.6	11.6	11.6	11.6	11.6	11.6	11.6	11.6	B02
	B03											B03
	B04											B04
	B05											B05
	B06									11.9	14.2	B06
	B07											B07
	B08									12.3	15.2	B08
	B09											B09
	B10									13.1	16.7	B10
	B11											B11
	B12											B12
	B14							12.2	14.4	16.4		B14
	B15											B15
C	003	11.6	11.6	11.6	11.6	11.6	11.6	13.1	14.5			003
	005											005
	006											006
	008											008
	010											010
	012						12.3	13.3				012
	014							13.8				014
	017					12.3	13.1		14.9			017
	020											020
	022				12.3	13.1		14.2	15.2			022
	025				13.1	13.8	13.8	15.2				025
	028					14.2	14.2	15.7				028
	031				12.3	13.1	16.1	16.1				031
D	B14	11.6	11.6	11.6	11.6	11.6	11.6	11.6	11.6	11.6		B14
	B17											B17
	B20								11.9	12.5		B20
	B22								12.0	12.8		B22
	B24								12.5	13.8		B24
	B28								12.8	14.5		B28
	B31								13.1	15.2		B31
	B35							12.2	14.1			B35
	B38							12.5	14.7			B38
	B42							13.1				B42
	045			12.3	14.2	15.2						045
	050				14.8	15.8						050
E	042	11.6	11.6	11.6	13.1	14.5						042
	045											045
	050											050
	052											052
	054											054
	057			12.3	13.8							057
	062											062
	066	12.3	12.3	13.8	14.5	15.8						066
	072			12.3		15.2						072
	085	13.1	13.1	14.5								085

Inlet pressure is measured at inlet flange with petroleum base fluids at viscosity between 60 and 300 SUS. The difference between inlet pressure at the pump flange and atmospheric pressure must not exceed 2.9 PSI to prevent aeration.

Multiply absolute pressure by 1,25 for HF-3, HF-4 fluids.
by 1,35 for HF-5 fluid.
by 1,10 for ester or rapeseed base.

Use the cartridge with the highest absolute pressure for double and triple pumps.

Back To The Table Of Content

MAIN CALCULATION

To resolve
Volumetric displ. *Vi [in³/rev.]*
Available flow *qv [GPM]*
Input power *P [HP]*

Performances required
Requested flow qv [GPM] 19.8
Speed n [RPM] 2500
Pressure p [bar] 3600

Routine :

Example :

1. First calculation $Vi = \frac{231\ Q}{n}$

$Vi = \frac{231 \times 19.8}{2500} = 1.83\ in^3/rev.$

2. Choice Vi of pump immediately greater (see tabulation)

T7B B10, Vi = 1.94 in³/rev.

3. Theoretical flow of this pump

$q_{Vi} = \frac{Vp \times n}{231}$

$q_{Vi} = \frac{1.94 \times 2500}{231} = 21.0$ GPM

4. Find qvs leakage function of pressure $q_{Vs} = f(p)$ *on curve at 60 or 115 SUS*

T7B (page 14) : q_{Vs} = .79 GPM at 3600 PSI, 115 SUS

5. Available flow $q_{Ve} = q_{Vi} - q_{Vs}$

q_{Ve} = 21.0 - .79 = 20.21 GPM

6. Theoretical input power

$Pi = \frac{q_{Vi} \times p}{1714}$

$Pi = \frac{21.0 \times 3600}{1714} = 44.1$ HP

7. Find Ps hydrodynamic power loss on curve

T7B (page 14) : Ps at 2500 RPM, 3600 PSI = 1.2 HP

8. Calculation of necessary input power
P = Pi + Ps

P = 44.1 + 1.2 = 45.3 HP

9. Results

Vi = 1.94 in³/rev.
q_{Ve} = 20.21 GPM
P = 45.30 HP
) T7B B10

These calculation steps must be followed for each application.

INTERMITTENT PRESSURE RATING

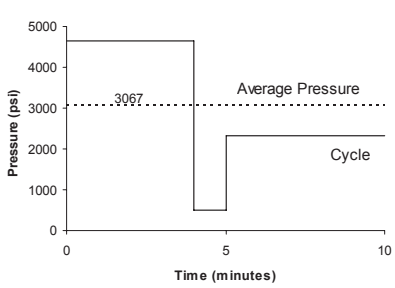

T7 and T67 units may be operated intermittently at pressures higher than the recommended continuous rating when the time weighted average of pressure is less than or equal to the continuous duty pressure rating. This intermittent pressure rating calculation is only valid if other parameters : speed, fluid, viscosity and contamination level are respected.
For total cycle time longer than 15 minutes, please consult your DENISON Hydraulics representative.

Example : T7B - B10
Duty cycle 4 min. at 4650 PSI
1 min. at 500 PSI
5 min. at 2300 PSI

$\frac{(4 \times 4650) + (1 \times 500) + (5 \times 2300)}{10} = 3070$ PSI

3070 PSI is lower than 4200 PSI allowed as continuous pressure for T7B - B10 with HF-0 fluid.

Back To The Table Of Content

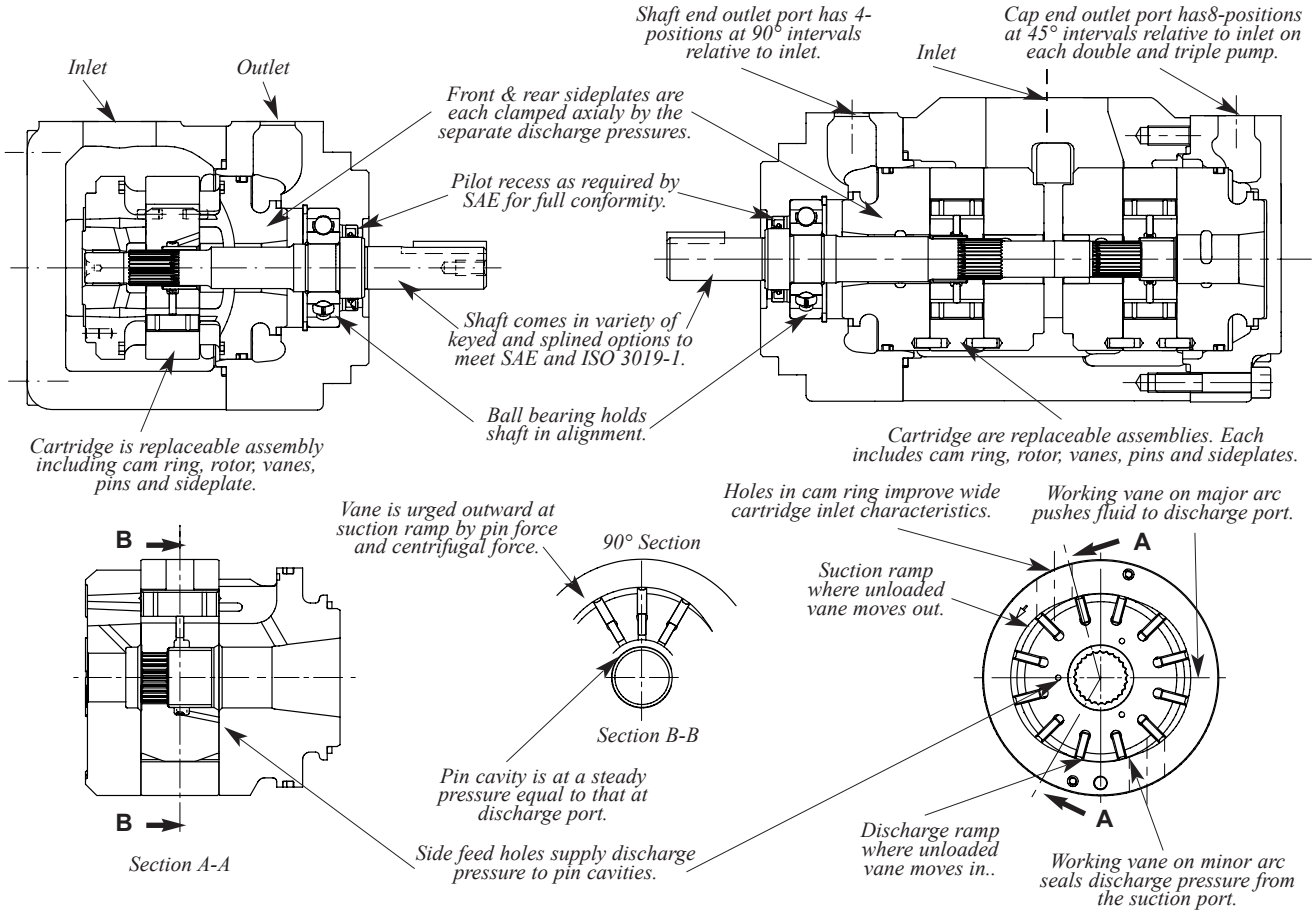

APPLICATION ADVANTAGES

- The high pressure capability up to 4650 PSI, in the small envelope, reduces installation costs and provides extended life at reduced pressure.
- The high volumetric efficiency, typically better than 94%, reduces heat generation, and allows speeds down to 600 RPM at full pressure.
- The high mechanical efficiency, typically better than 94%, reduces energy consumption.
- The wide speed range (600 RPM at 3600 RPM), combined with large size cartridge displacements will optimize operation for the lowest noise level in the smallest envelope
- The low speed (600 RPM), low pressure, high viscosity (3900 SUS) allows application in cold environment with a minimum energy consumption and without risk of seizure.
- The low ripple pressure (± 29 PSI) reduces piping noise and increases lifetime of other components in the circuit.
- The high resistance to particle contamination, because of the double lip vane, increases pump life.
- The large variety of options (cam displacement, shaft, porting) allows customized installation.
- Noise : Specially designed to optimize the low noise level characteristics.
- Cartridge concept : drops maintenance costs by two.

Back To The Table Of Content

GENERAL :

All DENISON Hydraulics vane pumps & motors are individually tested to provide the best quality & reliability. Modifications, conversions & repairs can only be done by authorized dealers or OEM to avoid invalidation of the guarantee.

The pumps & motors are to be used in the design limits indicated in all the sales bulletins. Please contact DENISON when tresspassing the catalog limits.

Do not modify or work on the pump (or motor) under pressure or when the electric motor (or any drive) is on.

Qualified personnel is required to assemble and set-up hydraulic devices.

Always conform yourself to the valid regulations (safety, electrical, environment...).

The following instructions are important to follow to obtain a good service life time from the unit.

ROTATION & PORTS INDICATION

The rotation and ports orientation are viewed from the shaft end.

CW stands for clockwise, right-hand rotation.

CCW stands for counter-clockwise, left-hand rotation.

START-UP CHECK-UP

Check that the assembly of the power unit is correct :

The distance between the suction pipe & the return lines in the tank should be at its maximum.

A bevel on both suction & return lines is recommended to increase the surface and so lower the velocity. We suggest a 45° minimum angle.

Velocities : inlet $1{,}64 < x < 6{,}23$ ft per sec.
: return $x < 19{,}7$ ft per sec.
: Always insure that all return and suction lines are under the oil level to avoid forming aeration or vortex effect. This should be done under the most critical situation (all cylinders extended for example). Straight and short pipes are the best.

$$V = \frac{Q\ (GPM)}{3.12 \times \pi \times r^2\ (in)} = ft/s$$

The size of the air filter should be 3 times greater than the max. instant return flow (all cylinders in movement for example).

If the pump is in the tank, please choose the NOP option (no paint) and use a short inlet pipe.

DENISON does not recommend inlet strainers. If needed, a 100 mesh (149 microns) is the finest mesh recommended.

A coaxial drive is recommended. For any other type of drives, please contact DENISON.

Make sure that all protective plugs & covers have been removed.

Check the pump rotation versus the E-motor or engine rotation.

Start-up :

The tank has been filled up with a clean fluid in proper conditions.

Flushing the system with an external pump prior to the start-up is good.

To allow a good priming of the pump, the air should be bled off.

The first valve on the circuit should be open to tank.

Air bleed off valves are available on the market place.

It is possible to bleed off the air by creating a leak in the P port of the pump.

Warning : this has to be done in low pressure mode as it could create a dangerous fluid leak. Make sure that the pressure cannot rise (open center valve to tank, pressure relief valve unloaded ...).

When oil free of air appears, tighten the connectors to the correct torque.

Back To The Table Of Content

The pump should prime within a few seconds. If not, please read the troubleshooting guide (1 - EN0721 - *).

If the pump is noisy, please troubleshoot the system.

Never operate the pump at top speed and pressure without checking the completion of pump priming.

SHAFT & COUPLING DATA :

COUPLINGS AND FEMALE SPLINES

- The mating female spline should be free to float and find its own center. If both members are rigidly supported, they must be aligned within 0.006" TIR or less to reduce fretting. The angular alignment of two splines axes must be less than ± 0.002" per 1" radius.
- The coupling spline must be lubricated with a lithium molydisulfide grease, disulfide of molybdenum or a similar lubricant.
- The coupling must be hardened to a hardness between 29 and 45 HRC.
- The female spline must be made to conform to the Class 1 fit as described in SAE-J498b (1971). This is described as a Flat Root Side Fit.

KEYED SHAFTS

DENISON Hydraulics supplies the T6 series keyed shaft pumps with high strength heat-treated keys. Therefore, when installing or replacing these pumps, the heat-treated keys must be used in order to ensure maximum life in the application. If the key is replaced, it must be a heat-treated key between 27 and 34 R.C. hardness. The corners of the keys must be chamfered by 0.03 to 0.04 at 45° to clear the radii in the key way.

The alignment of keyed shafts must be within tolerances given for splined shafts here above.

SHAFT LOADS

These products are primarily designed for coaxial drives which do not impose axial or side loading on the shaft. Contact DENISON for specific applications.

SPECIFIC POINTS :

MINIMUM INLET PRESSURE

Please read the charts in the sales leaflets as the minimum requested inlet pressure varies versus the displacement and the speed.
Never go under 11.6 PSI Absolute (-2.9 PSI G).

MAXIMUM INLET PRESSURE

It is recommended to always have at least 22 PSI differential between inlet and outlet. Standard shaft seals are limited to 10 PSI G but some allow 100 PSI G. Please contact DENISON for more information.

MINIMUM OUTLET PRESSURE

It is recommended to always have at least 22 PSI differential between inlet and outlet.

VERTICAL MOUNT

When assembled vertically, always be careful to prevent any air from being trapped in the pump (behind the shaft seal for example).

FLUIDS :

DENISON CLASSIFICATIONS

Type of fluids : For all types of fluids, DENISON's products have different pressures, speeds & temperature limits. Please refer to the sales leaflets.
HF-0 = Anti-wear petroleum base.
HF-1 = Non anti-wear petroleum base.
HF-2 = Anti-wear petroleum base.
HF-3 = Water-in-oil invert emulsions.
HF-4 = Water glycol solutions.
HF-5 = Synthetic fluids.

FILTRATION RECOMMENDATIONS

NAS 1638 class 8 or better.
ISO 18 / 14 or better.
Inlet strainers : DENISON does not recommend inlet strainers.
If requested, a 100 mesh (149 microns) is the finest mesh recommended.

RECOMMENDED FLUIDS

Petroleum based antiwear R & O fluids.
These fluids are the recommended fluids for pumps & motors. Maximum catalog ratings and performance data are based on operation with these fluids. These fluids are covered by DENISON Hydraulics HF-0 and HF-2 specifications.

Back To The Table Of Content

ACCEPTABLE ALTERNATE FLUIDS

The use of fluids other than petroleum based antiwear R & O fluids requires that the maximum ratings of the pumps will be reduced. In some cases the minimum replenishment pressures must be increased. Consult specific sections for more details (page 11).

VISCOSITY

	Indutrial
Max. (cold start, low speed & pressure)	3900 SUS
Max. (full speed & pressure)	500 SUS
Optimum (max. life)	140 SUS
Min. (full speed & pressure for HF-1, HF-3, HF-4 & HF-5 fluids)	90 SUS
Min. (full speed & pressure for HF-0 & HF-2 fluids)	60 SUS

VISCOSITY INDEX

90 min. Higher values extend the range of operating temperatures.

TEMPERATURES

The usual limitating factor of temperature (low or high) comes from the obtained viscosity. The seals are sometimes the limit : standard seals range from -9.4° F to 194° F.

Maximum fluid temperature (θ)	° F
HF-0, HF-1, HF-2	+ 212
HF-3, HF-4	+ 122
HF-5	+ 158
Biodegradable fluids (esters & rapeseed base)	+ 149

Minimum fluid temperature (θ) (also depend on max. viscosity)	° F
HF-0, HF-1, HF-2, HF-5	- 0.4
HF-3, HF-4	+ 50
Biodegradable fluids (esters & rapeseed base)	- 0.4

Over or under these values, please contact DENISON.

WATER CONTAMINATION IN THE FLUID

Maximum acceptable content of water :
- 0,10 % for mineral base fluids.
- 0,05 % for synthetic fluids, crankcase oils, biodegradable fluids.

If the amount of water is higher, then it should be drained off the circuit.

FLUID POWER FORMULAS

Pump input torque — lbs. in.

$$\frac{\text{pressure (PSI) x displacement in}^3\text{/rev}}{2\,\pi \text{ x mech. eff.}}$$

Pump input power — HP

$$\frac{\text{rpm x (in}^3\text{/rev) x pressure (PSI)}}{395934 \text{ x overall eff.}}$$

Pump output flow — U.S. gpm

$$\frac{\text{rpm x (in}^3\text{/rev) x volumetric eff.}}{231}$$

Fluid motor speed — rpm

$$\frac{231 \text{ x flow rate (U.S. gpm) x volumetric eff.}}{\text{displacement (in}^3\text{/rev.)}}$$

Fluid motor torque — lbs. in

$$\frac{\text{pressure (PSI) x displacement (in}^3\text{/rev) x mech. eff.}}{2\,\pi}$$

Fluid motor power — HP

$$\frac{\text{rpm x (in}^3\text{/rev) x (PSI) x overall eff.}}{395934}$$

Back To The Table Of Content

GENERAL CHARACTERISTICS

	Mounting standard	Weight without connector and bracket - Lbs	Moment of inertia Lb.in^2	SAE 4 bolts J518 - ISO/DIS 6162-1		
				Suction	Pressure	
T7B	ISO 3019-2 100 A2 HW	50.7	1.1	1"1/2	1" or 3/4"	
T7BS	SAE J744 SAE B					
T6C	SAE J744 SAE B	34.6	2.6	1"1/2	1"	
T7D	ISO 3019-2 125 A2 HW	57.3	6.7	2"	1"1/4	
T7DS	SAE J744 SAE C					
T7E	ISO 3019-2 125 A2 HW	95.4	21.3	3 "	1"1/2	
T7ES	SAE J744 SAE C					
					P1	P2
T7BB	ISO 3019-2 100 A2 HW	71.9	2.3	2"1/2	1" or 3/4"	3/4"
T7BBS	SAE J744 SAE B					
T6CC	SAE J744 SAE B	57.3	5.8	2"1/2 or 3"	1"	1" or 3/4"
T67CB	SAE J744 SAE B	57.3	3.9	2"1/2	1"	3/4"
T7DB	ISO 3019-2 125 A2 HW	85.1	9.0	3"	1"1/4	1" or 3/4"
T7DBS	SAE J744 SAE C					
T67DC	SAE J744 SAE C	85.1	9.0	3"	1"1/4	1" or 3/4"
T7DD	ISO 3019-2 125 B4 HW	123.4	12.4	4"	1"1/4	1"1/4
T7DDS	SAE J744 SAE C					
T7EB	ISO 3019-2 125 A2 HW	121.2	22.5	3"1/2	1"1/2	3/4"
T7EBS	SAE J744 SAE C					
T67EC	SAE J744 SAE C	121.2	24.2	3"1/2	1"1/2	1"
T7ED	ISO 3019-2 125 A2 HW	145.5	27.2	4"	1"1/2	1"1/4
T7EDS	SAE J744 SAE C					
T7EE	ISO 3019-2 250 B4 HW	209.4	33.2	4"	1"1/2	1"1/4
T7EES	SAE J744 SAE E					
					P1	P2	P3
T67DBB	SAE J744 SAE C	134.5	8.9	4"	1"1/4	1"	3/4"
T67DCB			10.1				
T67DCC			11.4				1" or 3/4"
T7DDB	ISO 3019-2 125 B4 HW	145.5	13.5	4"	1"1/4	1"1/4	1" or 3/4"
T7DDBS	SAE J744 SAE C						
T67DDCS	SAE J744 SAE C	145.5	14.7	4"	1"1/4	1"1/4	1" or 3/4"
T7EDB	ISO 3019-2 250 B4 HW	224.9	26.1	4"	1"1/2	1"1/4	1" or 3/4"
T7EDBS	SAE J744 SAE E						
T67EDC	ISO 3019-2 250 B4 HW	224.9	27.4	4"	1"1/2	1"1/4	1" or 3/4"
T67EDCS	SAE J744 SAE E						

Back To The Table Of Content

Model No. **T7B or T7BS - B10 - 1 R 00 - A 1 M0 - ..**

T7B series - 100 A2 HW
ISO 2 bolts 3019-2 mounting flange
T7BS series - SAE B 2 bolts
Mounting flange J744

Displacement
Volumetric displacement (in^3/rev)

B02 = .35	B09 = 1.71
B03 = .60	B10 = 1.94
B04 = .78	B11 = 2.13
B05 = .97	B12 = 2.50
B06 = 1.21	B14 = 2.75
B07 = 1.37	B15 = 3.05
B08 = 1.52	

Type of shaft T7B - T7BS
2 = keyed (ISO R775)

Type of shaft T7BS
1 = keyed (SAE B)
3 = splined (SAE B)
4 = splined (SAE BB)

Modifications

Mounting w/connection variables
4 bolts SAE flange (J518C)

	Metric thread T7B - T7BS		UNC thread T7BS	
	M0	M1	00	01
P	1”	3/4”	1”	3/4”
S	1”1/2			

Seal class
1 = S1 - BUNA N
4 = S4 - EPDM
5 = S5 - VITON

Design letter

Porting combination
00 = standard

Direction of rotation (view on shaft end)
R = Clockwise
L = Counter-clockwise

P = Pressure port
S = Suction port

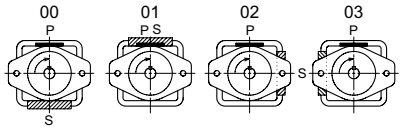

INTERNAL LEAKAGE (TYPICAL)

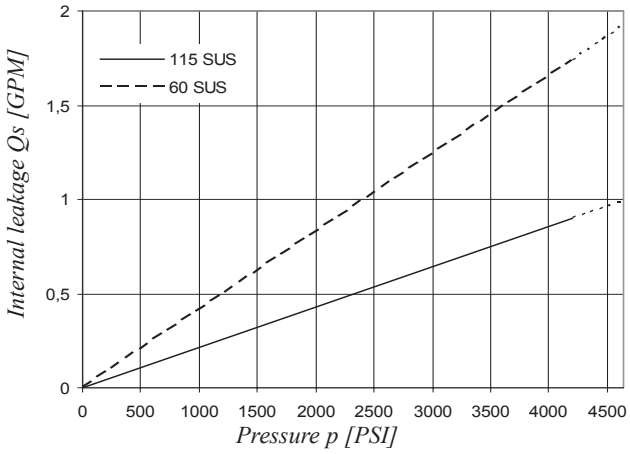

Do not operate pump more than 5 seconds at any speed or viscosity if internal leakage is more than 50% of theoretical flow.

NOISE LEVEL (TYPICAL) T7B - B10

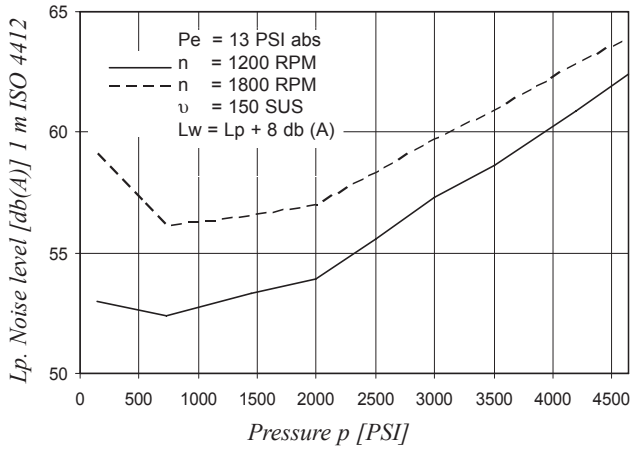

HYDROMECHANICAL POWER LOSS (TYPICAL)

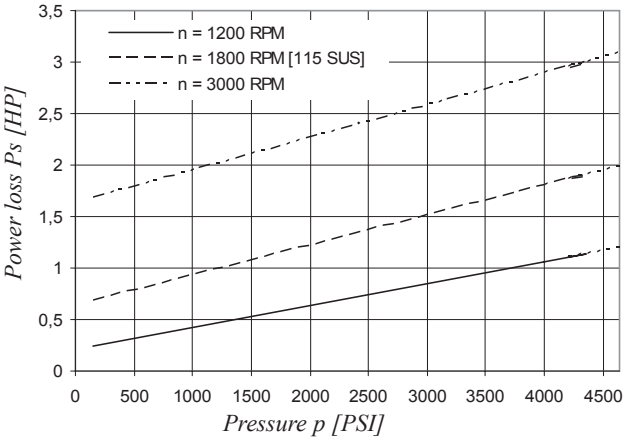

PERMISSIBLE RADIAL LOAD

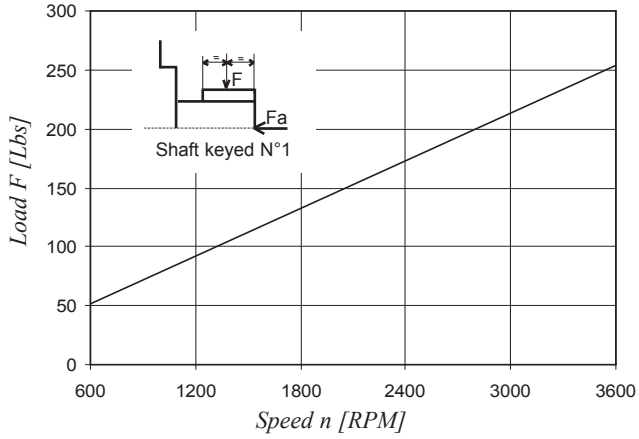

Maximum permissible axial load Fa = 180 Lbs

Back To The Table Of Content

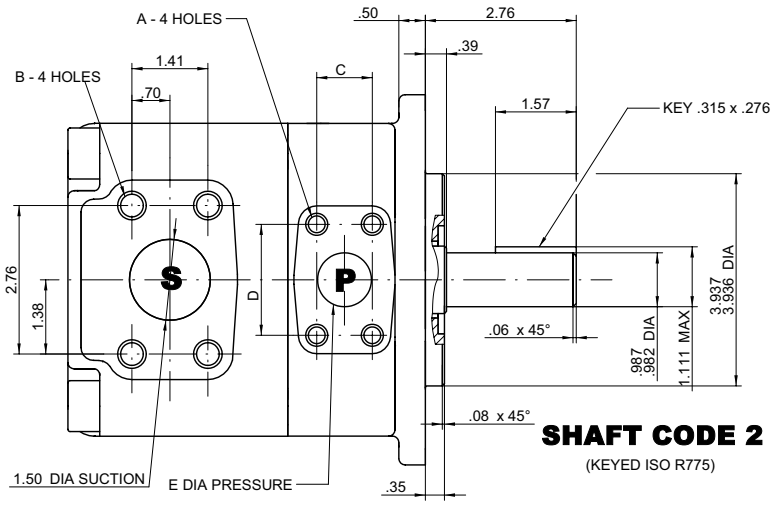

T7B SERIE

(FLANGE ISO 3019/2 100A2HW)

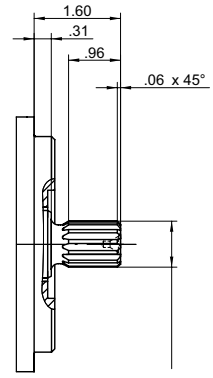

SHAFT CODE 2

(KEYED ISO R775)

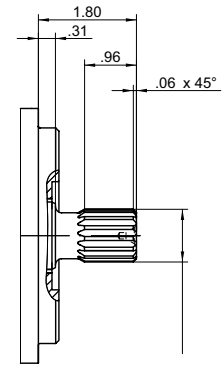

SHAFT CODE 3

SAE B INVOLUTE SPLINE DATA
CLASS 1-FLAT ROOT SIDE FIT
J498b - PITCH 16/32
13 TEETH - 30° PRESSURE ANGLE

SHAFT CODE 4

SAE BB INVOLUTE SPLINE DATA
CLASS 1-FLAT ROOT SIDE FIT
J498b - PITCH 16/32
15 TEETH - 30° PRESSURE ANGLE

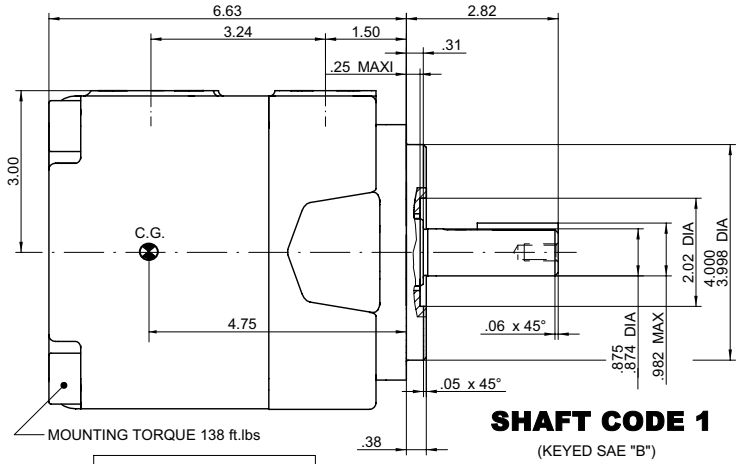

SHAFT CODE 1

(KEYED SAE "B")

T7BS SERIE

(FLANGE SAE "B")

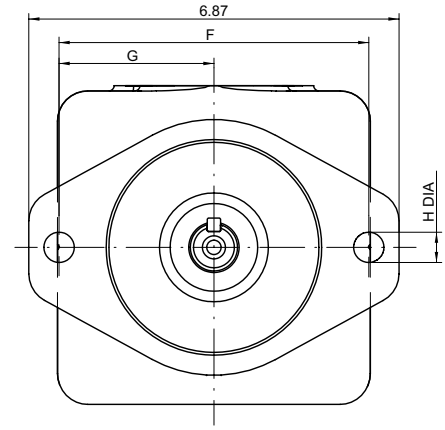

	T7BS		T7B	
	00	01	M0	M1
A DIA	3/8 16 UNC x .75 deep		M10 x .75 deep	
B DIA	1/2 13 UNC x .88 deep		M12 x .88 deep	
C	1.03	.87	1.03	.87
D	2.06	1.87	2.06	1.87
E DIA	1.00	.75	1.00	.75
F	5.75		5.51	
G	2.87		2.75	
H DIA	.56		.55	

Shaft torque limits [in^3/rev. x PSI]	
Shaft	Vi x p max.
1	14615
2	18246
3	18246
4	18246

OPERATING CHARACTERISTICS – TYPICAL [115 SUS]

Pressure port	Series	Volumetric displacem. Vi	Flow q_{Ve} [GPM] & n = 1800 RPM			Input power P [HP] & n = 1800 RPM		
			p = 0 PSI	p = 2000 PSI	p = 4650 PSI	p = 100 PSI	p = 2000 PSI	p = 4650 PSI
T7B T7BS	B02	.35 in^3/rev	2.76	2.33	1.73	0.74	4.02	8.59
	B03	.60 in^3/rev	4.66	4.23	3.63	0.85	6.24	13.75
	B04	.78 in^3/rev	6.09	5.66	5.06	0.94	7.90	17.62
	B05	.97 in^3/rev	7.56	7.13	6.53	1.02	9.62	21.62
	B06	1.21 in^3/rev	9.42	8.99	8.39	1.13	11.79	26.66
	B07	1.37 in^3/rev	10.70	10.27	9.67	1.20	13.29	30.14
	B08	1.52 in^3/rev	11.84	11.41	10.81	1.27	14.62	33.24
	B09	1.71 in^3/rev	13.31	12.87	12.28	1.36	16.35	37.25
	B10	1.94 in^3/rev	15.12	14.69	14.09	1.46	18.45	42.14
	B11	2.13 in^3/rev	16.64	16.19	15.61 1)	1.55	20.17	43.22 1)
	B12	2.50 in^3/rev	19.50	19.07	18.54 1)	1.72	23.55	50.58 1)
	B14	2.75 in^3/rev	21.40	20.95	20.37 1)	1.83	25.80	55.48 1)
	B15	3.05 in^3/rev	23.78	23.35	22.88 2)	1.97	28.55	57.35 2)

1) B11 - B12 – B14 = 4350 PSI max. int. 2) B15 = 4060 PSI max. int.

Back To The Table Of Content

Model No. **T6C - 022 - 1 R 00 - B 1 - ..**

Series SAE B 2 bolts
Mounting flange J744

Displacement
Volumetric displacement (in^3/rev)

003 = .66	017 = 3.56
005 = 1.05	020 = 3.89
006 = 1.30	022 = 4.29
008 = 1.61	025 = 4.84
010 = 2.08	028 = 5.42
012 = 2.26	031 = 6.10
014 = 2.81	

Type of shaft
1 = keyed (SAE B)
2 = keyed (non SAE)
3 = splined (SAE B)
4 = splined (SAE BB)

Modifications

Seal class
1 = S1 - BUNA N
4 = S4 - EPDM
5 = S5 - VITON

Design letter

Porting combination
00 = standard

Direction of rotation (view on shaft end)
R = Clockwise
L = Counter-clockwise

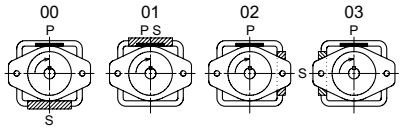

P = Pressure port
S = Suction port

INTERNAL LEAKAGE (TYPICAL)

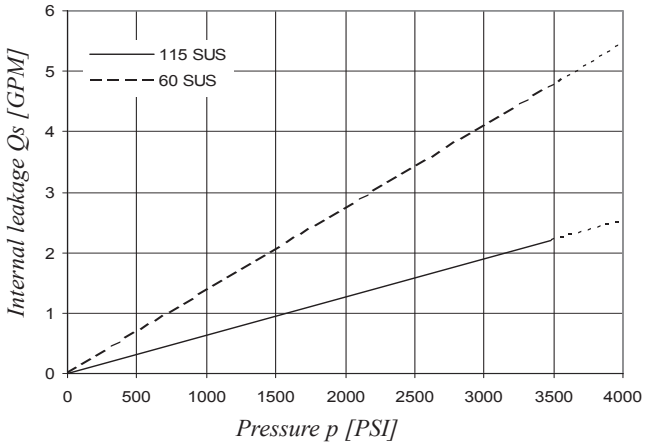

Do not operate pump more than 5 seconds at any speed or viscosity if internal leakage is more than 50% of theoretical flow.

NOISE LEVEL (TYPICAL) T6C - 022

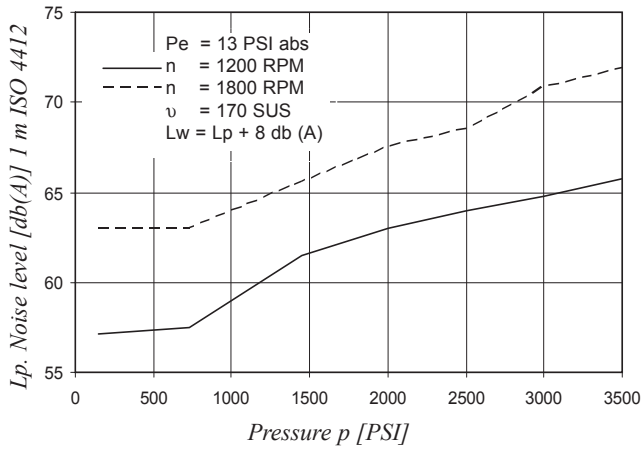

HYDROMECHANICAL POWER LOSS (TYPICAL)

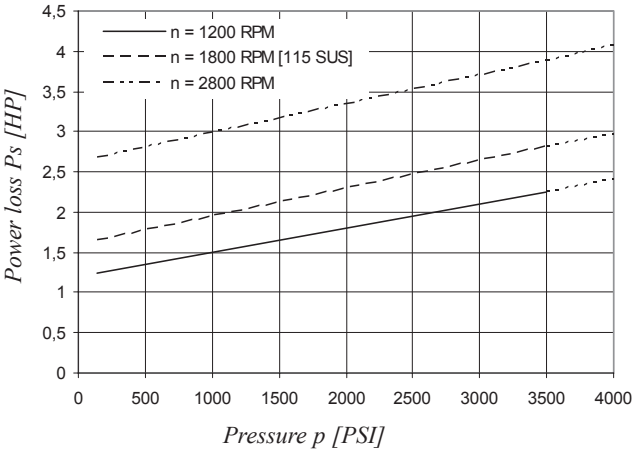

PERMISSIBLE RADIAL LOAD

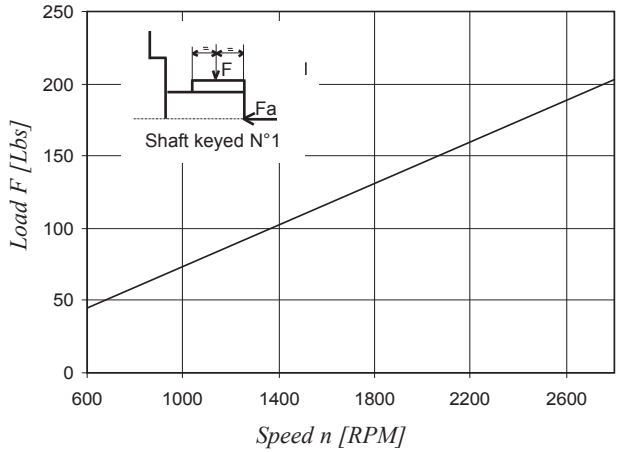

Maximum permissible axial load Fa = 180 Lbs

Back To The Table Of Content

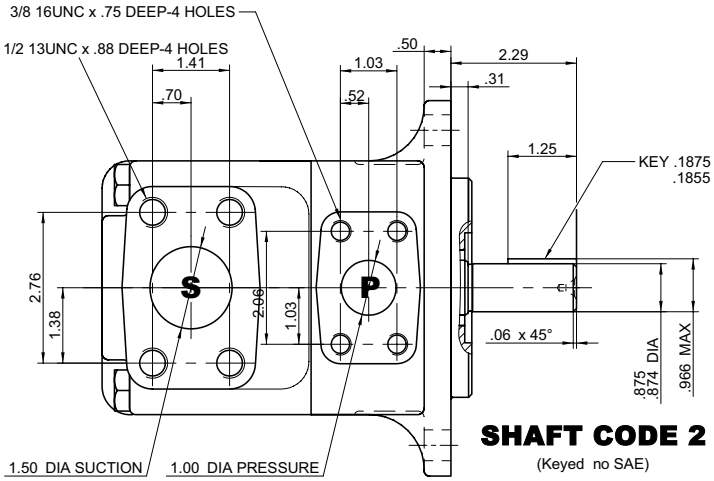

SHAFT CODE 2
(Keyed no SAE)

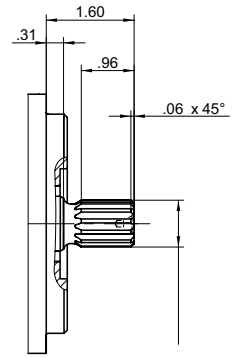

SHAFT CODE 3
SAE B INVOLUTE SPLINE DATA
CLASS 1-FLAT ROOT SIDE FIT
J498b - PITCH 16/32
13 TEETH - 30° PRESSURE ANGLE

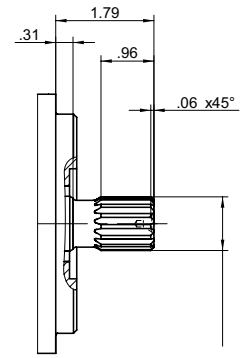

SHAFT CODE 4
SAE BB INVOLUTE SPLINE DATA
CLASS 1-FLAT ROOT SIDE FIT
J498b - PITCH 16/32
15 TEETH - 30° PRESSURE ANGLE

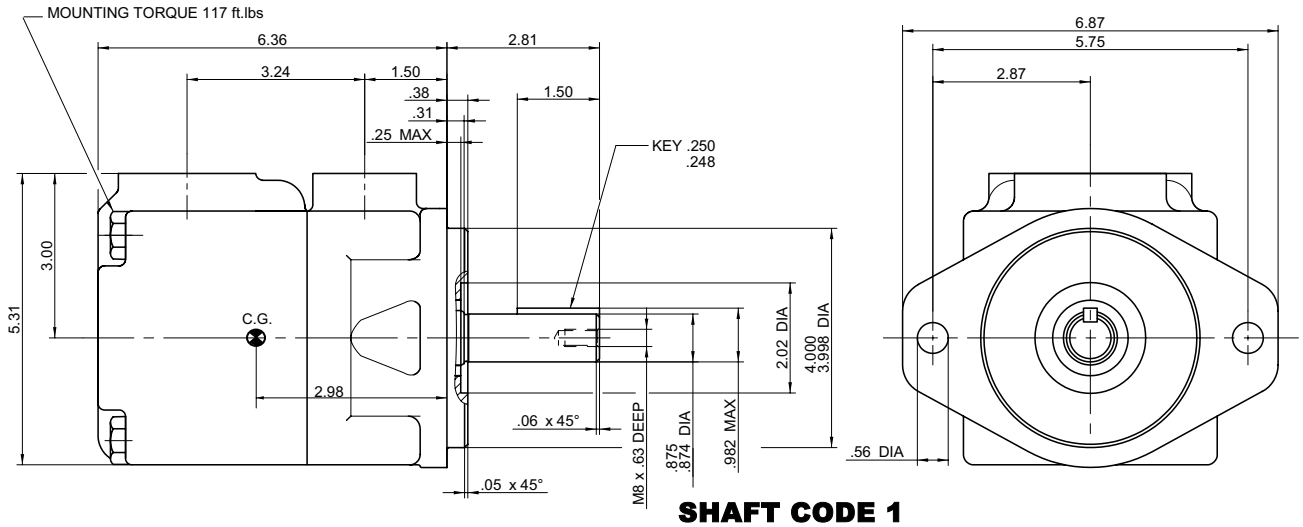

SHAFT CODE 1
(Keyed SAE B)

Shaft torque limits [in³/rev. x PSI]	
Shaft	Vi x p max.
1	14473
2	12666
3	18246
4	19309

OPERATING CHARACTERISTICS – TYPICAL [115 SUS]

Pressure port	Series	Volumetric displacem. Vi	Flow q_{Ve} [GPM] & n = 1800 RPM			Input power P [HP] & n = 1800 RPM		
			p = 0 PSI	p = 2000 PSI	p = 3500 PSI	p = 100 PSI	p = 2000 PSI	p = 3500 PSI
T6C	003	.66 in³/rev	5.14	3.85	2.95	2.11	8.45	13.38
	005	1.05 in³/rev	8.18	6.89	5.99	2.29	12.00	19.59
	006	1.30 in³/rev	10.13	8.84	7.94	2.40	14.28	23.57
	008	1.61 in³/rev	12.55	11.26	10.36	2.54	17.11	28.53
	010	2.08 in³/rev	16.22	14.93	14.03	2.76	21.38	36.00
	012	2.26 in³/rev	17.64	16.35	15.45	2.84	23.05	38.92
	014	2.81 in³/rev	21.88	20.59	19.69	3.09	27.99	47.56
	017	3.56 in³/rev	27.73	26.44	25.54	3.43	34.81	59.51
	020	3.89 in³/rev	30.34	29.05	28.15	3.58	37.86	64.85
	022	4.29 in³/rev	33.43	32.14	31.24	3.76	41.47	71.16
	025	4.84 in³/rev	37.71	36.42	35.52	4.01	46.46	79.90
	028	5.42 in³/rev	42.23	40.94	40.32 1)	4.27	51.74	76.73 1)
	031	6.10 in³/rev	47.56	46.27	45.65 1)	4.58	57.95	86.06 1)

1) 028 – 031 = 3000 PSI max. int. Port connection can be furnished with metric threads.

Back To The Table Of Content

Model No. **T7D or T7DS - B42 - 1 R 00 - A 1 M0 - ..**

T7D series - 125 A2 HW
ISO 2 bolts 3019-2 mounting flange
T7DS series - SAE C 2 bolts
Mounting flange J744

Displacement
Volumetric displacement (in^3/rev)

B14 = 2.68	B31 = 6.05
B17 = 3.36	B35 = 6.92
B20 = 4.03	B38 = 7.36
B22 = 4.29	B42 = 8.39
B24 = 4.95	045 = 8.89
B28 = 5.49	050 = 9.64

Type of shaft T7DS
1 = keyed (SAE C 32 - 1)
2 = keyed (non SAE)
3 = splined (SAE C 32 - 4)
4 = splined (non SAE)

Type of shaft T7D - T7DS
5 = keyed (ISO 3019-2 - G32M)

Modifications

Mounting w/connection variables
4 bolts SAE flange J518

	P = 1"1/4 - S = 2"		
	UNC	Metric	
T7D		M0	
T7DS	00	M0	Y0[1)]

1) 3630 PSI max. int.

Seal class
1 = S1 - BUNA N
4 = S4 - EPDM
5 = S5 - VITON

Design letter

Porting combination
00 = standard

Direction of rotation (view on shaft end)
R = Clockwise
L = Counter-clockwise

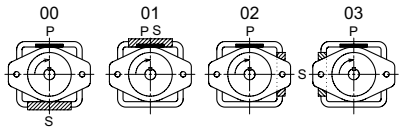

P = Pressure port
S = Suction port

INTERNAL LEAKAGE (TYPICAL)

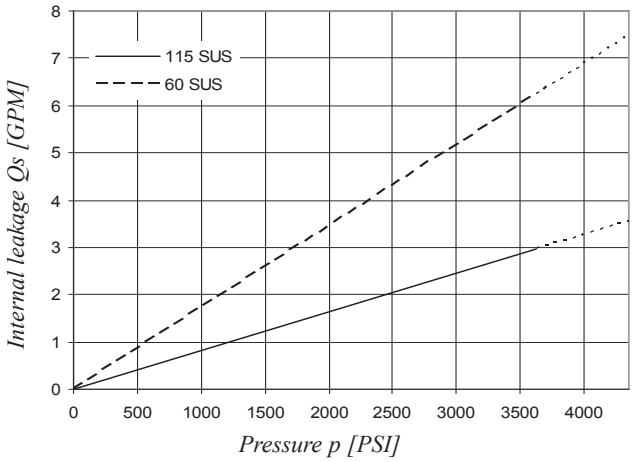

Do not operate pump more than 5 seconds at any speed or viscosity if internal leakage is more than 50% of theoretical flow.

NOISE LEVEL (TYPICAL) T7D - B31

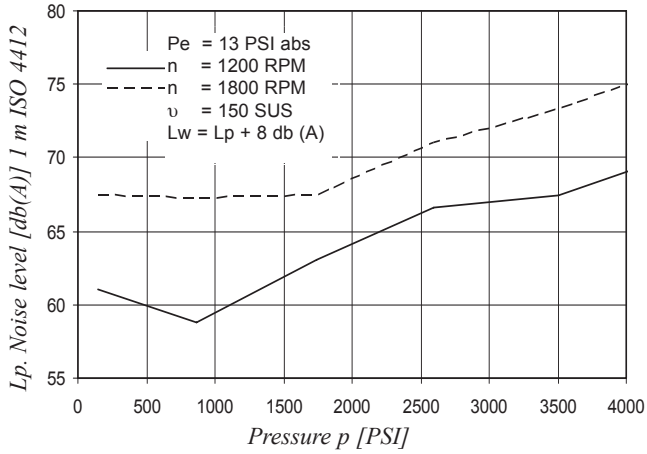

HYDROMECHANICAL POWER LOSS (TYPICAL)

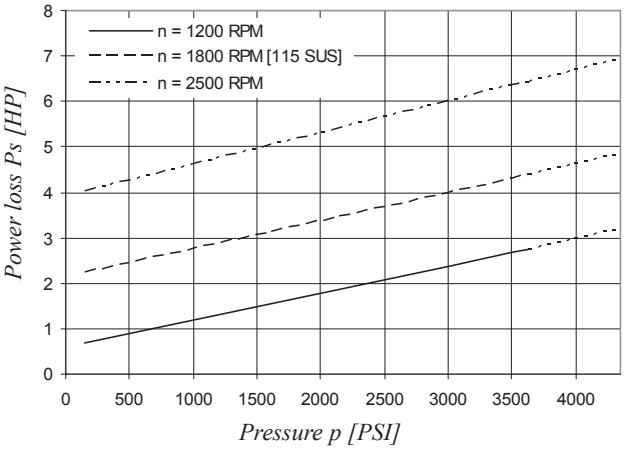

PERMISSIBLE RADIAL LOAD

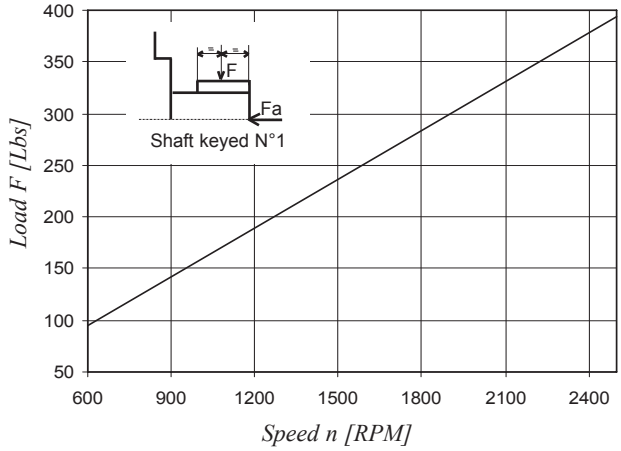

Maximum permissible axial load Fa = 270 Lbs

Back To The Table Of Content

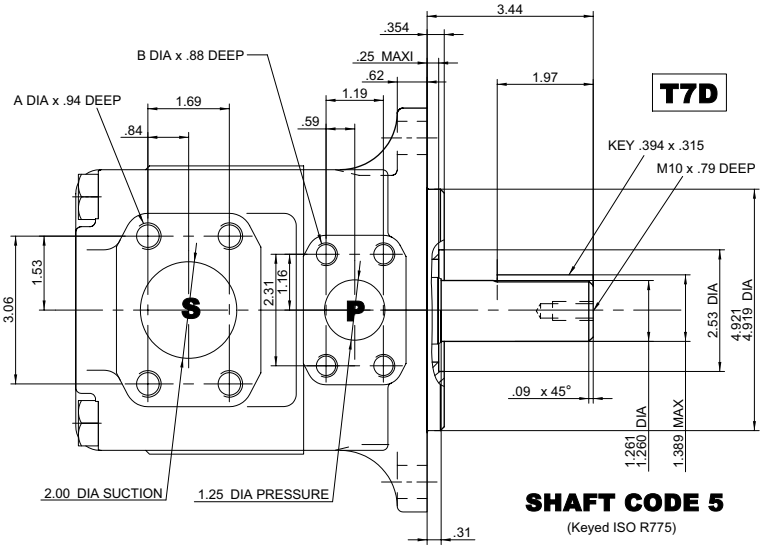

SHAFT CODE 5
(Keyed ISO R775)

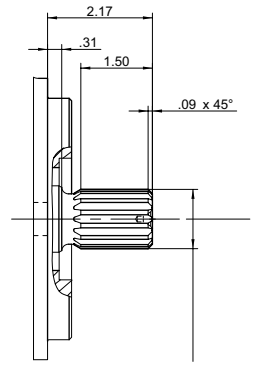

SHAFT CODE 3
SAE C INVOLUTE SPLINE DATA
CLASS 1-FLAT ROOT SIDE FIT
J498b - PITCH 12/24
14 THEETH- 30° PRESSURE ANGLE

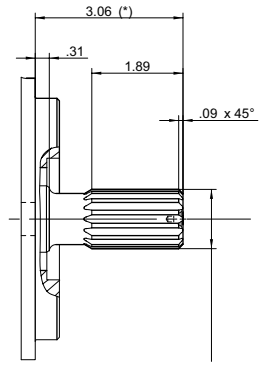

SHAFT CODE 4
SAE C Spc (*) INVOLUTE SPLINE DATA
CLASS 1-FLAT ROOT SIDE FIT
J498b - PITCH 12/24
14 THEETH- 30° PRESSURE ANGLE

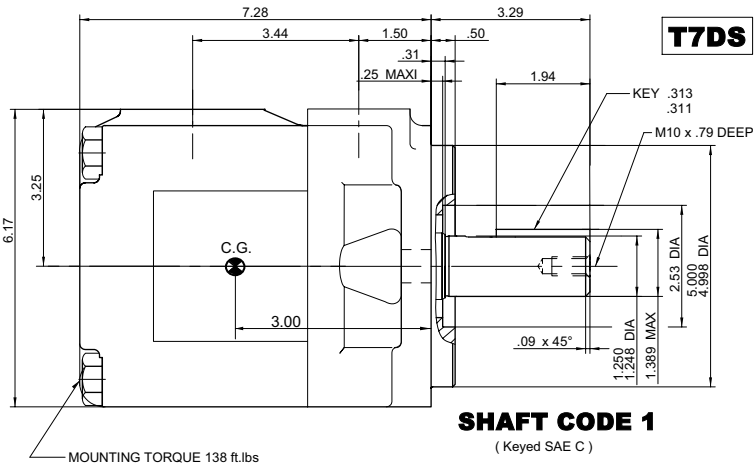

SHAFT CODE 1
(Keyed SAE C)

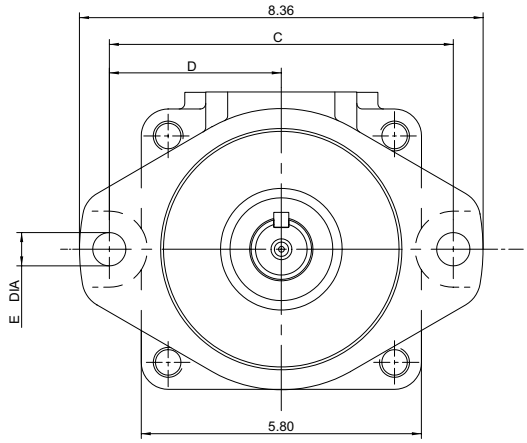

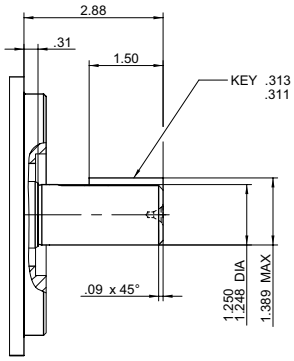

SHAFT CODE 2
(Keyed no SAE)

Shaft torque limits [in^3/rev. x PSI]	
Shaft	Vi x p max.
1	38299
2	30638
3	54207
4	54207
5	39238

	T7DS		T7D	
	00	M0	Y0 1)	M0
A DIA	1/2 - 13 UNC	M12	M12	M12
B DIA	7/16 - 14 UNC	M12	M10	M12
C	7.12			7.09
D	3.56			3.54
E DIA	.69			.71

1) 3630 PSI max. int

OPERATING CHARACTERISTICS – TYPICAL [115 SUS]

Pressure port	Series	Volumetric displacem. Vi	Flow q_{Ve} [GPM] & n = 1800 RPM			Input power P [HP] & n = 1800 RPM		
			p = 0 PSI	p = 2000 PSI	p = 4350 PSI	p = 100 PSI	p = 2000 PSI	p = 4350 PSI
T7D T7DS	B14	2.68 in^3/rev	20.92	19.18	17.19	3.46	27.77	58.49
	B17	3.36 in^3/rev	26.16	24.41	22.42	3.77	33.88	71.92
	B20	4.03 in^3/rev	31.39	29.64	27.65	4.07	39.98	85.35
	B22	4.29 in^3/rev	33.43	31.69	29.70	4.19	42.37	90.60
	B24	4.95 in^3/rev	38.57	36.82	34.83	4.49	48.36	103.78
	B28	5.49 in^3/rev	42.80	41.06	39.06	4.74	53.30	114.65
	B31	6.05 in^3/rev	47.18	45.43	43.44	4.99	58.41	125.88
	B35	6.92 in^3/rev	53.93	52.18	50.44 1)	5.39	66.29	130.39 1)
	B38	7.36 in^3/rev	57.35	55.61	53.87 1)	5.59	70.28	138.38 1)
	B42	8.39 in^3/rev	65.39	63.65	62.15 2)	6.05	79.66	149.39 2)
	045	8.89 in^3/rev	69.29	67.11	65.47 3)	6.74	83.75	144.41 3)
	050	9.64 in^3/rev	75.14	72.96	71.78 4)	7.08	90.58	134.54 4)

1) B35 – B38 = 4060 PSI max. int. 2) B42 = 3770 PSI max. int. 3) 045 = 3500 PSI max. int. 4) 050 = 3000 PSI max. int.

** special 2"1/2 (2.5 dia)suction also available – Please contact DENISON Hydraulics.*

Back To The Table Of Content

Model No. **T7E or T7ES - 072 - 1 R 00 - A 1 M0 - ..**

T7E series - 125 A2 HW
ISO 2 bolts 3019-2 mounting flange
T7ES series - SAE C 2 bolts
Mounting flange J744

Displacement
Volumetric displacement (in^3/rev)
042 = 8.07
045 = 8.70
050 = 9.67
052 = 10.00
054 = 10.43
057 = 11.18
062 = 12.00
066 = 13.00
072 = 13.86
085 = 16.40

Type of shaft T7E - T7ES
5 = keyed (ISO R775 - G38M)

Type of shaft T7ES
1 = keyed (SAE CC)
2 = keyed (non SAE)
3 = splined (SAE C)
4 = splined (SAE CC)

Modifications

Mounting w/connection variables
4 bolts SAE flange (J518)

	Metric thread T7E - T7ES	UNC thread T7ES
	M0	00
P	1” 1/2	
S	3”	

Seal class
1 = S1 - BUNA N
4 = S4 - EPDM
5 = S5 - VITON

Design letter

Porting combination
00 = standard

Direction of rotation (view on shaft end)
R = Clockwise
L = Counter-clockwise

P = pressure port
S = Suction port

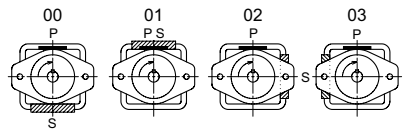

INTERNAL LEAKAGE (TYPICAL)

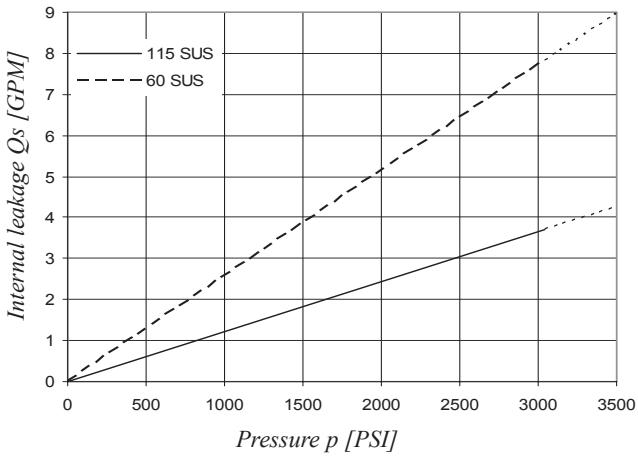

Do not operate pump more than 5 seconds at any speed or viscosity if internal leakage is more than 50% of theoretical flow.

NOISE LEVEL (TYPICAL) T7ES - 050

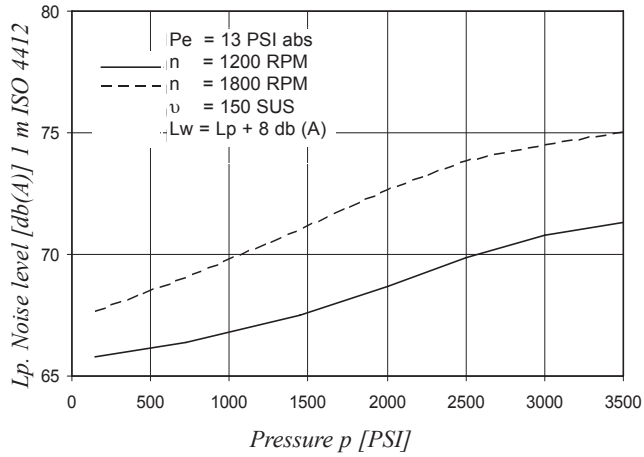

HYDROMECHANICAL POWER LOSS (TYPICAL)

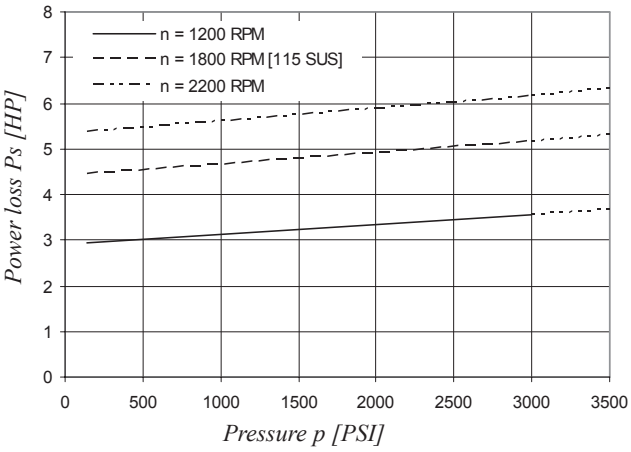

PERMISSIBLE RADIAL LOAD

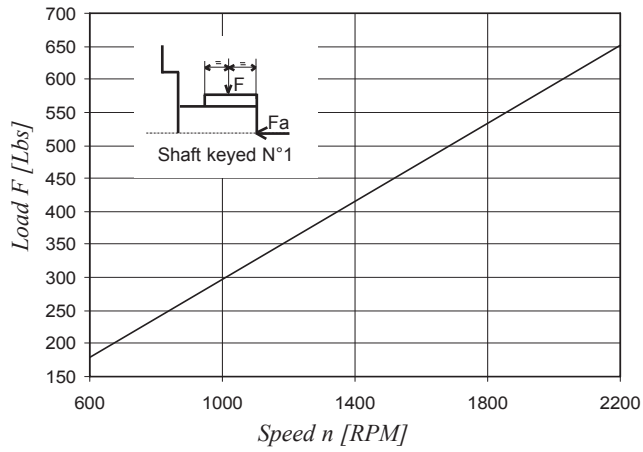

Maximum permissible axial load Fa = 449 Lbs

Back To The Table Of Content

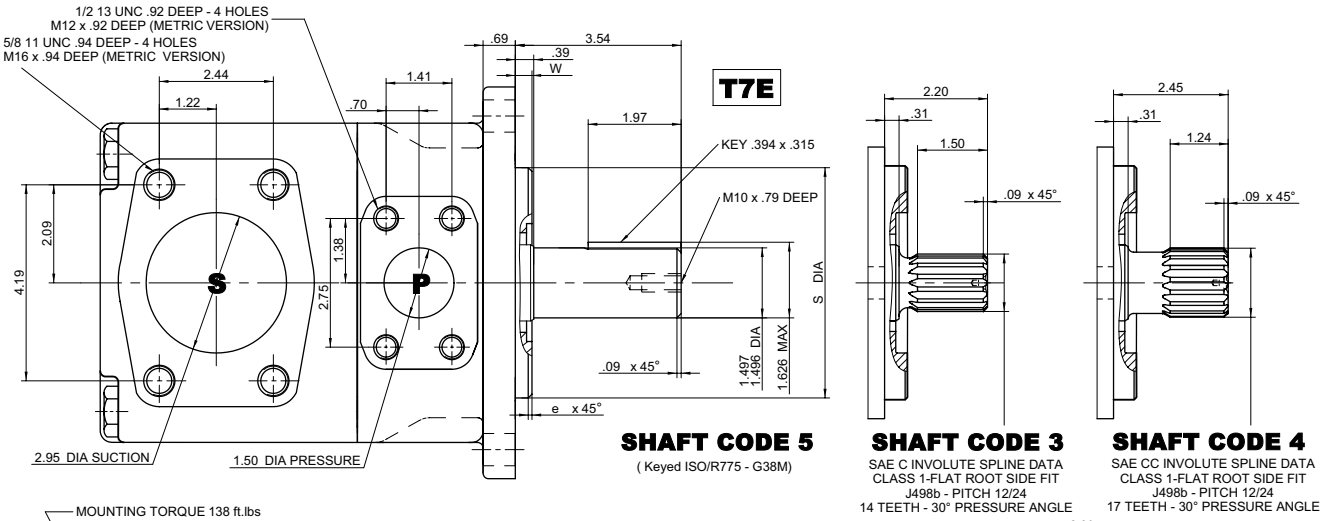

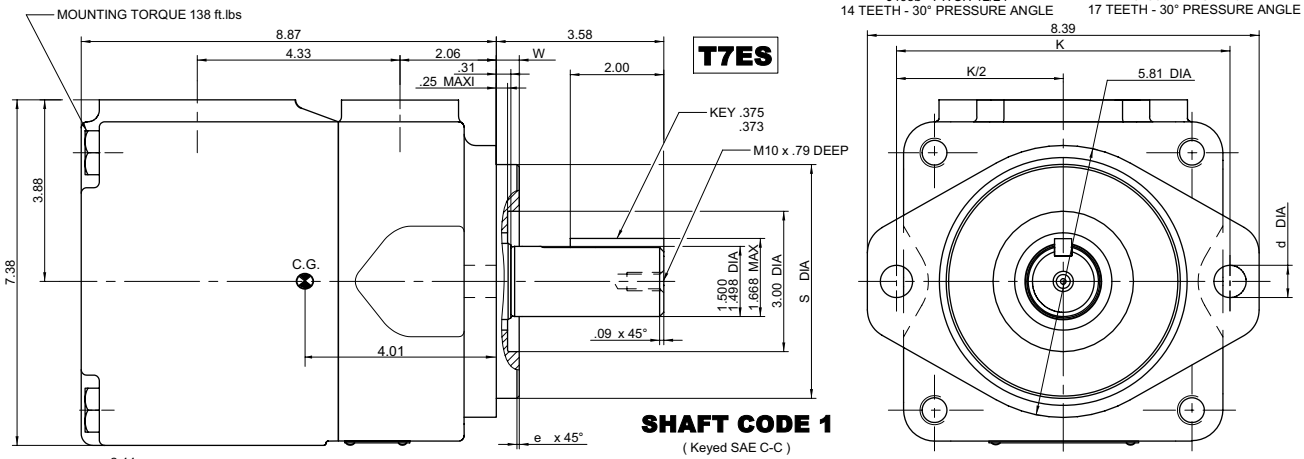

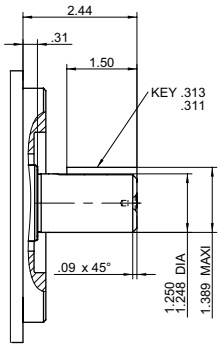

SHAFT CODE 2

(Keyed no SAE)

Shaft torque limits [in^3/rev. x PSI]	
Shaft	Vi x p max.
1	48273
2	30638
3	54207
4	54207
5	48273

Alternate mounting flange						
Series	S DIA		e x 45°	W	K	d DIA
	Max.	Min.				
T7E	4.921	4.919	.079	.374	7.087	.709
T7ES	5.000	4.998	.051	.500	7.126	.689

OPERATING CHARACTERISTICS – TYPICAL [115 SUS]

Pressure port	Series	Volumetric displacem. Vi	Flow q_{ve} [GPM] & n = 1800 RPM			Input power P [HP] & n = 1800 RPM		
			p = 0 PSI	p = 2000 PSI	p = 3500 PSI	p = 100 PSI	p = 2000 PSI	p = 3500 PSI
T7E T7ES	042	8.07 in^3/rev	62.92	60.37	58.52	8.09	78.44	133.80
	045	8.70 in^3/rev	67.72	65.17	63.32	8.37	84.04	143.60
	050	9.67 in^3/rev	75.38	72.83	70.98	8.82	92.97	159.24
	052	10.00 in^3/rev	78.37	75.82	73.97	8.99	96.47	165.36
	054	10.43 in^3/rev	81.27	78.72	76.87	9.17	99.75	177.46
	057	11.18 in^3/rev	87.12	84.57	82.72	9.51	106.57	189.84
	062	12.00 in^3/rev	93.54	90.99	89.14	9.88	114.17	196.34
	066	13.00 in^3/rev	101.44	98.89	97.04	10.34	123.38	212.46
	072	13.86 in^3/rev	108.00	105.45	103.60	10.72	131.04	225.86
	085	16.40 in^3/rev	127.79	126.13 1)	-	11.88	101.66 1)	-

1) 085 = 1300 PSI max. int.

** special 3"1/2 (3.5 DIA) suction also available – Please contact DENISON Hydraulics.*

Back To The Table Of Content

Model No. **T7BB or T7BBS - B10 - B10 - 1 R 00 - A 1 M1 - ..**

P1 P2

T7BB series - 100 A2 HW
ISO 2 bolts 3019-2 mounting flange
T7BBS series - SAE B 2 bolts
Mounting flange J744

Displacement P1 and P2
Volumetric displacement (in^3/rev)

B02 = .35	B09 = 1.71
B03 = .60	B10 = 1.94
B04 = .78	B11 = 2.13
B05 = .97	B12 = 2.50
B06 = 1.21	B14 = 2.75
B07 = 1.37	B15 = 3.05
B08 = 1.52	

Type of shaft T7BB - T7BBS
5 = keyed (ISO R775)

Type of shaft T7BBS
1 = keyed (non SAE)
2 = keyed (SAE BB)
3 = splined (SAE B)
4 = splined (SAE BB)

Modifications

Mounting w/connection variables
4 bolts SAE flange (J518)

	Metric thread T7BB - T7BBS		UNC thread T7BBS	
	M0	M1	00	01
P1	1”	3/4”	1”	3/4”
P2	3/4”			
S	2”1/2			

Seal class
1 = S1 - BUNA N
4 = S4 - EPDM
5 = S5 - VITON

Design letter

Porting combination (see page 62)
00 = standard

Direction of rotation (view on shaft end)
R = Clockwise
L = Counter-clockwise

INTERNAL LEAKAGE (TYPICAL)

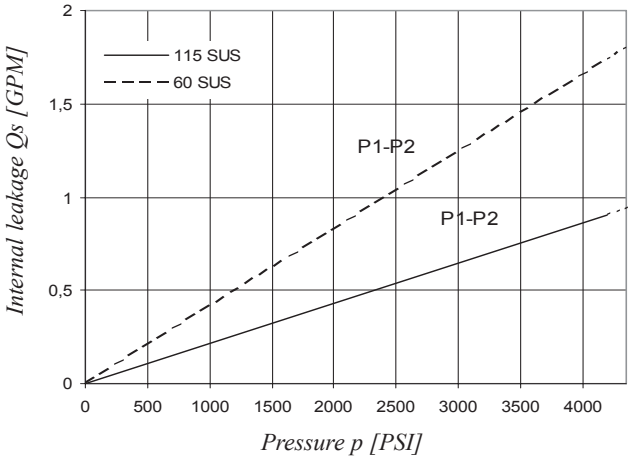

Do not operate pump more than 5 seconds at any speed or viscosity if internal leakage is higher than 50% of theoretical flow. Total leakage is the sum of each section loss at its operating conditions.

NOISE LEVEL (TYPICAL) T7BB - B10 - B04

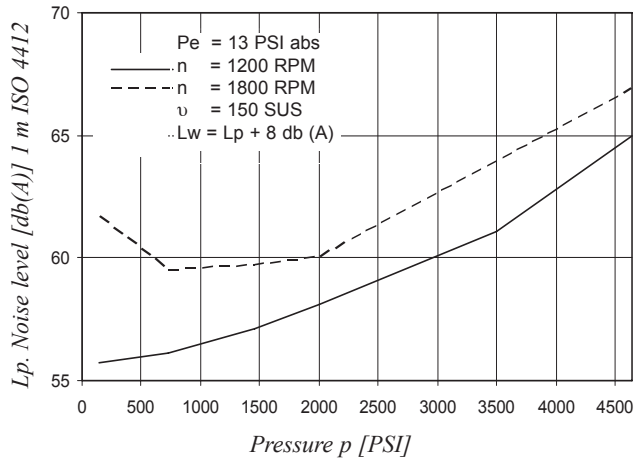

Double pump noise level is given with each section discharging at the pressure noted on the curve.

HYDROMECHANICAL POWER LOSS (TYPICAL)

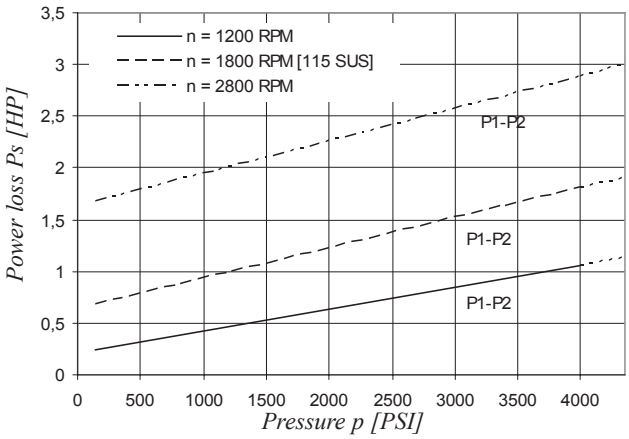

Total hydromechanical power loss is the sum of each section at its operating conditions.

PERMISSIBLE RADIAL LOAD

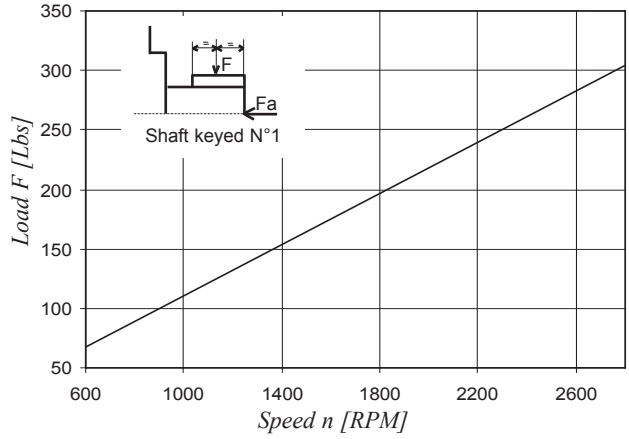

Maximum permissible axial load Fa = 180 Lbs

Back To The Table Of Content

T7BB SERIE

(FLANGE ISO 3019/2 100A2HW)

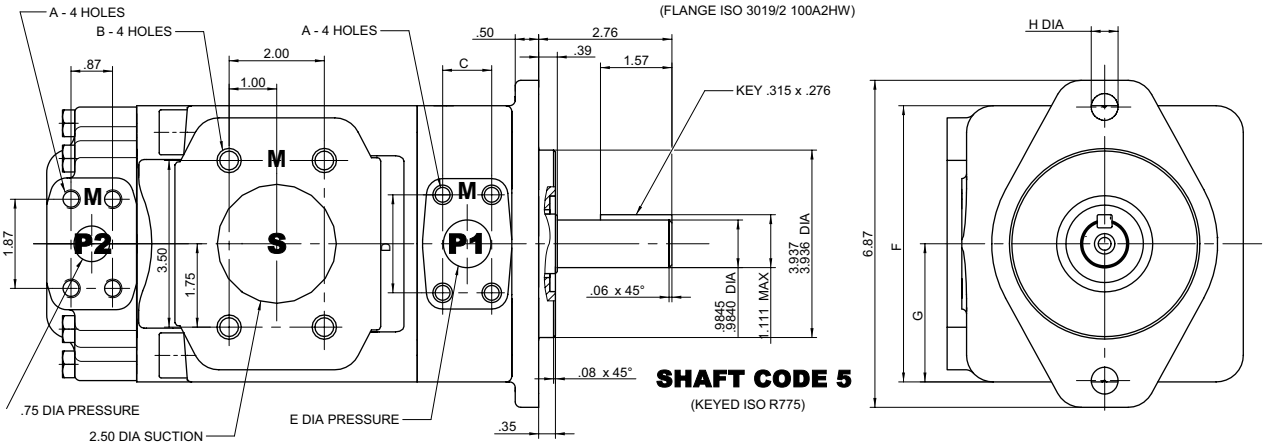

SHAFT CODE 5

(KEYED ISO R775)

T7BBS SERIE

(FLANGE SAE "B")

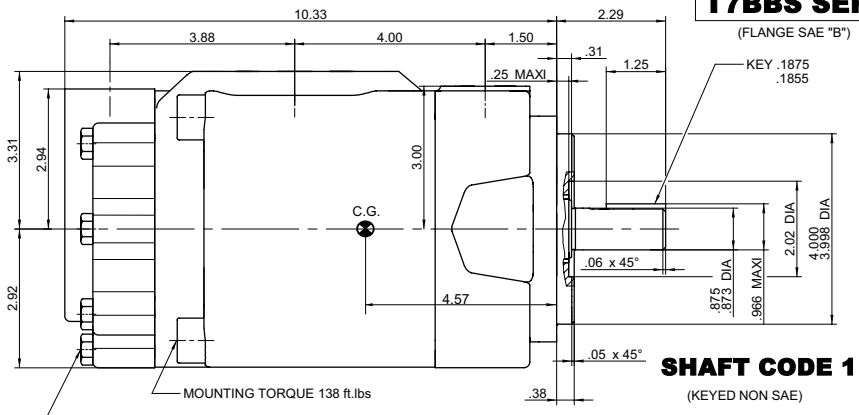

SHAFT CODE 1

(KEYED NON SAE)

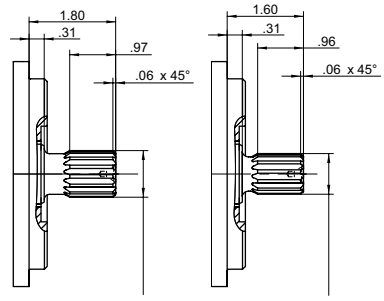

SHAFT CODE 4

SAE B-B INVOLUTE SPLINE DATA
CLASS 1-FLAT ROOT SIDE FIT
J498b - PITCH 16/32
15 TEETH - 30° PRESSURE ANGLE

SHAFT CODE 3

SAE B INVOLUTE SPLINE DATA
CLASS 1-FLAT ROOT SIDE FIT
J498b - PITCH 16/32
13 TEETH - 30° PRESSURE ANGLE

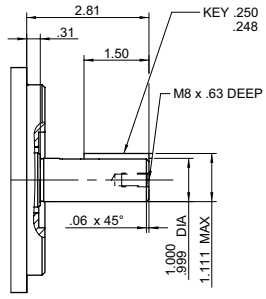

SHAFT CODE 2

(Keyed SAE "B-B")

Shaft torque limits [in^3/rev. x PSI]	
Shaft	Vi x p max.
1	12266
2	18972
3	18246
4	28937
5	22409

	T7BBS		T7BB	
	00	01	M0	M1
A DIA	3/8 16 UNC x .75 deep		M10 x .75 deep	
B DIA	1/2 13 UNC x .88 deep		M12 x .88 deep	
C	1.03	.87	1.03	.87
D	2.06	1.87	2.06	1.87
E DIA	1.00	.75	1.00	.75
F	5.75		5.51	
G	2.87		2.75	
H DIA	.56		.55	

OPERATING CHARACTERISTICS – TYPICAL [115 SUS]

Pressure port	Series	Volumetric displacem. Vi	Flow q_{Ve} [GPM] & n = 1800 RPM			Input power P [HP] & n = 1800 RPM		
			p = 0 PSI	p = 2000 PSI	p = 4650 PSI	p = 100 PSI	p = 2000 PSI	p = 4650 PSI
P1 & P2	B02	.35 in^3/rev	2.76	2.33	1.73	0.74	4.02	8.59
	B03	.60 in^3/rev	4.66	4.23	3.63	0.85	6.24	13.75
	B04	.78 in^3/rev	6.09	5.66	5.06	0.94	7.90	17.62
	B05	.97 in^3/rev	7.56	7.13	6.53	1.02	9.62	21.62
	B06	1.21 in^3/rev	9.42	8.99	8.39	1.13	11.79	26.66
	B07	1.37 in^3/rev	10.70	10.27	9.67	1.20	13.29	30.14
	B08	1.52 in^3/rev	11.84	11.41	10.81	1.27	14.62	33.24
	B09	1.71 in^3/rev	13.31	12.87	12.28	1.36	16.35	37.25
	B10	1.94 in^3/rev	15.12	14.69	14.09	1.46	18.45	42.14
	B11	2.13 in^3/rev	16.64	16.19	15.61 1)	1.55	20.17	43.22 1)
	B12	2.50 in^3/rev	19.50	19.07	18.54 1)	1.72	23.55	50.58 1)
	B14	2.75 in^3/rev	21.40	20.95	20.37 1)	1.83	25.80	55.48 1)
	B15	3.05 in^3/rev	23.78	23.35	22.88 2)	1.97	28.55	57.35 2)

1) B11 - B12 – B14 = 4350 PSI max. int. 2) B15 = 4060 PSI max. int.

Back To The Table Of Content

Model No. **T6CC W - 022 - 008 - 1 R 00 - C 1 00 - ..**

P1 P2

Series SAE B 2 bolts
Mounting flange J744

Severe duty shaft

Displacement P1 and P2
Volumetric displacement (in^3/rev)

003 = .66	017 = 3.56
005 = 1.05	020 = 3.89
006 = 1.30	022 = 4.29
008 = 1.61	025 = 4.84
010 = 2.08	028 = 5.42
012 = 2.26	031 = 6.10
014 = 2.81	

Type of shaft
1 = keyed (non SAE)
3 = splined (SAE BB)
5 = splined (SAE B)

Severe duty shaft (T6CCW only)
2 = keyed (SAE BB)

Direction of rotation (view on shaft end)
R = Clockwise
L = Counter-clockwise

Modifications

Mounting w/connection variables
4 bolts SAE flange (J518)

	P1 = 1" - S = 3"		P1 = 1" - 2"1/2 2)	
	00	01	10	11
P2	1"	3/4" 1)	1"	3/4"

1) for 2.81 in^3/rev. max.
2) for 7.69 in^3/rev. max.
The largest cartridge must be always mounted in the front.

Seal class
1 = S1 - BUNA N
4 = S4 - EPDM
5 = S5 - VITON

Design letter

Porting combination (see page 62)
00 = standard

INTERNAL LEAKAGE (TYPICAL)

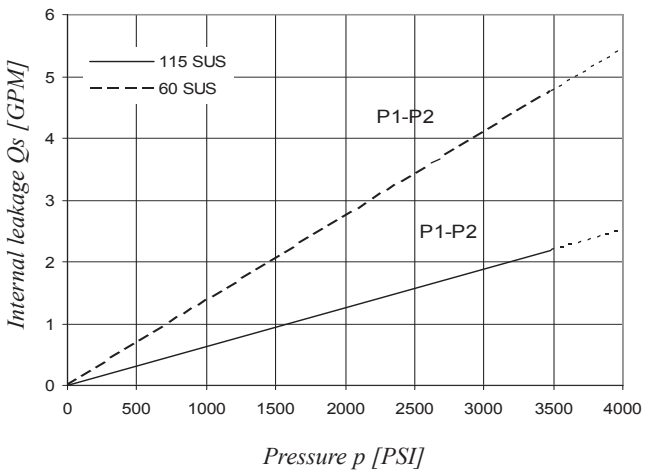

Do not operate pump more than 5 seconds at any speed or viscosity if internal leakage is higher than 50% of theoretical flow. Total leakage is the sum of each section loss at its operating conditions.

NOISE LEVEL (TYPICAL)
T6CC - 022 - 022

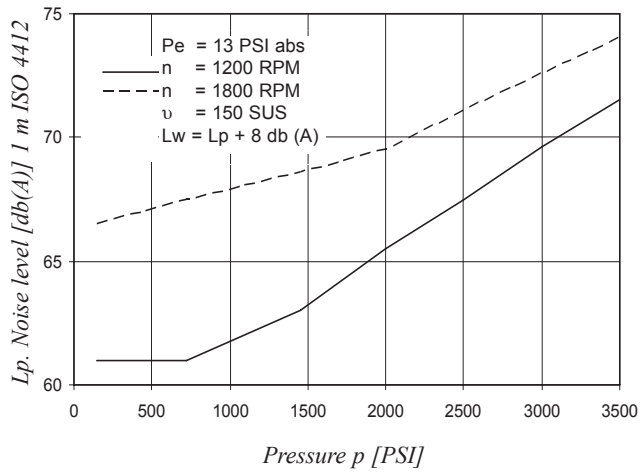

Double pump noise level is given with each section discharging at the pressure noted on the curve.

HYDROMECHANICAL POWER LOSS (TYPICAL)

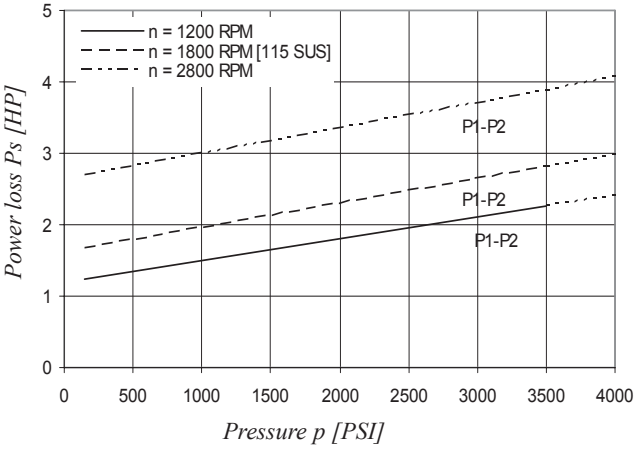

Total hydromechanical power loss is the sum of each section at its operating conditions.

PERMISSIBLE RADIAL LOAD

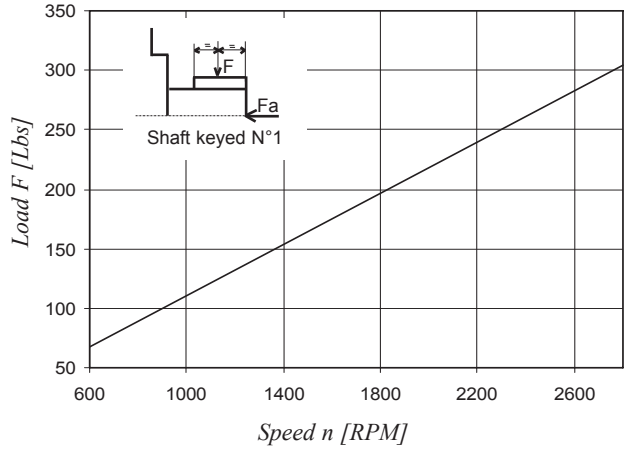

Maximum permissible axial load Fa = 180 Lbs

Back To The Table Of Content

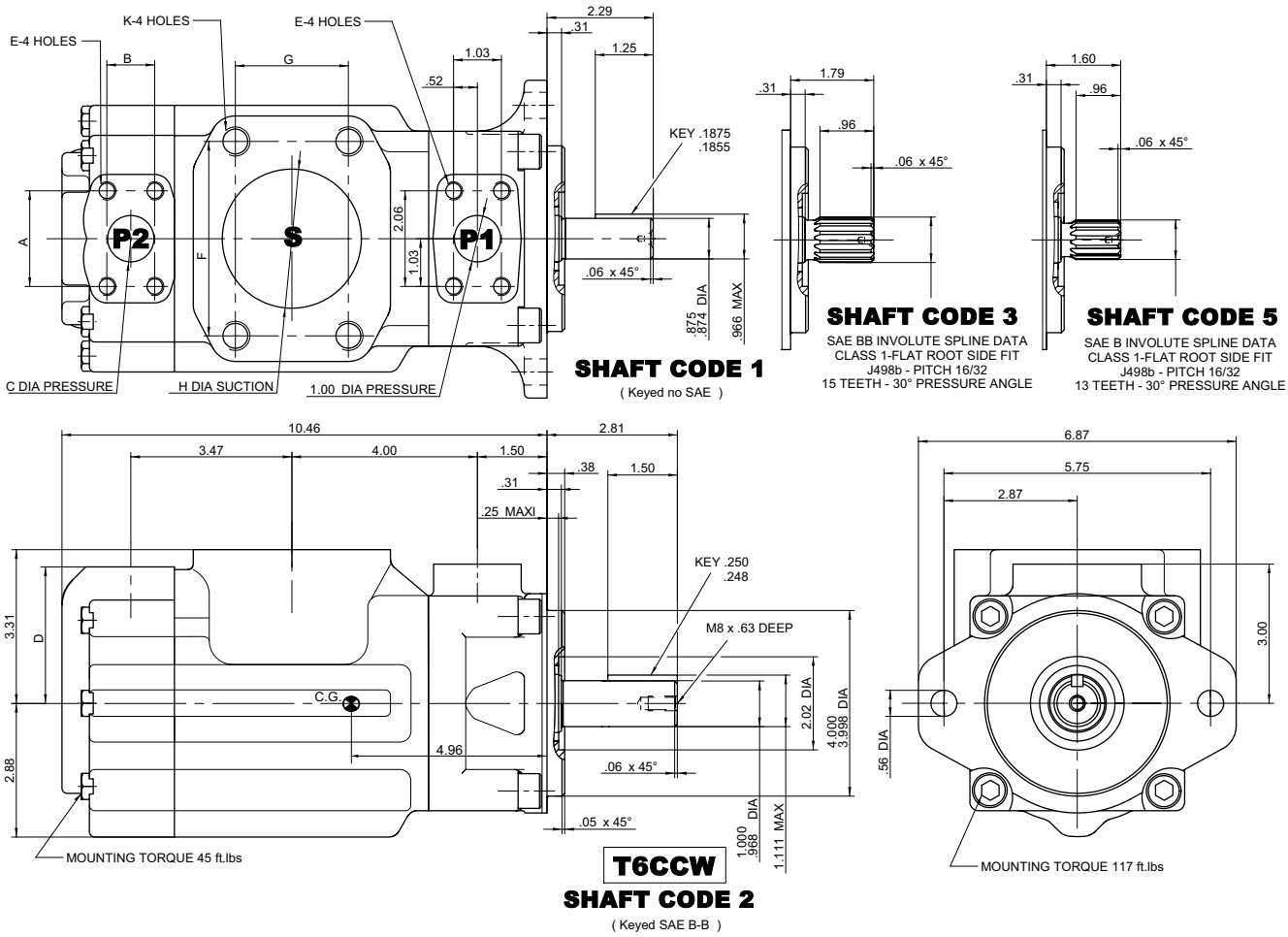

Alternate ports								
	S = 3"				S = 2"1/2 [2]			
F	4.19				3.50			
G	2.44				2.00			
H DIA	3.00				2.50			
Code	00	01 [1]	0M	W0 [1]	10	11 [1]	1M	W1 [1]
A	2.06	1.88	2.06	1.88	2.06	1.88	2.06	1.88
B	1.03	.88	1.03	.88	1.03	.88	1.03	.88
C DIA	1.00	.75	1.00	.75	1.00	.75	1.00	.75
D	2.94	3.00	2.94	3.00	2.94	3.00	2.94	3.00
E	3/8" - 16 UNC x .75 deep		M10 x .75 deep		3/8" - 16 UNC - .75 deep		M10 x .75 deep	
K	5/8" - 11 UNC x 1.12 deep		M16 x 1.12 deep		1/2" - 13 UNC x .941 deep		M12 x .941 deep	

[1] Max. cam 014 [2] P1 + P2 = 7.69 in^3/rev max.

Shaft torque limits [in^3/rev. x PSI]	
Shaft	Vi x p max.
1	12666
2	18972
3	28937
5	18246

OPERATING CHARACTERISTICS – TYPICAL [115 SUS]

Pressure port	Series	Volumetric displacem. Vi	Flow q_{Ve} [GPM] & n = 1800 RPM			Input power P [HP] & n = 1800 RPM		
			p = 0 PSI	p = 2000 PSI	p = 3500 PSI	p = 100 PSI	p = 2000 PSI	p = 3500 PSI
P1 & P2	003	.66 in^3/rev	5.14	3.85	2.95	2.11	8.45	13.38
	005	1.05 in^3/rev	8.18	6.89	5.99	2.29	12.00	19.59
	006	1.30 in^3/rev	10.13	8.84	7.94	2.40	14.28	23.57
	008	1.61 in^3/rev	12.55	11.26	10.36	2.54	17.11	28.53
	010	2.08 in^3/rev	16.22	14.93	14.03	2.76	21.38	36.00
	012	2.26 in^3/rev	17.64	16.35	15.45	2.84	23.05	38.92
	014	2.81 in^3/rev	21.88	20.59	19.69	3.09	27.99	47.56
	017	3.56 in^3/rev	27.73	26.44	25.54	3.43	34.81	59.51
	020	3.89 in^3/rev	30.34	29.05	28.15	3.58	37.86	64.85
	022	4.29 in^3/rev	33.43	32.14	31.24	3.76	41.47	71.16
	025	4.84 in^3/rev	37.71	36.42	35.52	4.01	46.46	79.90
	028	5.42 in^3/rev	42.23	40.94	40.32 [1]	4.27	51.74	76.73 [1]
	031	6.10 in^3/rev	47.56	46.27	45.65 [1]	4.58	57.95	86.06 [1]

1) 028 – 031 = 3000 PSI max. int.

Back To The Table Of Content

Model No. **T67CB W - 010 - B10 - 1 R 00 - A 1 - M1 - ..**

Series - SAE B 2 bolts
Mounting flange J744

Severe duty shaft

Displacement for "P1"
Volumetric displacement (in^3/rev)

003 = .66	017 = 3.56
005 = 1.05	020 = 3.89
006 = 1.30	022 = 4.29
008 = 1.61	025 = 4.84
010 = 2.08	028 = 5.42
012 = 2.26	031 = 6.10
014 = 2.81	

Displacement for "P2"
Volumetric displacement (in^3/rev)

B02 = .35	B09 = 1.71
B03 = .60	B10 = 1.94
B04 = .78	B11 = 2.13
B05 = .97	B12 = 2.50
B06 = 1.21	B14 = 2.75
B07 = 1.37	B15 = 3.05
B08 = 1.52	

Type of shaft
1 = keyed (non SAE)
3 = splined (SAE BB)
5 = splined (SAE B)

Severe duty shaft (T67CBW only)
2 = keyed (SAE BB)

Modifications

Mounting w/connection variables
11 = 4 bolts SAE flange (J518) UNC thread
M1 = 4 bolts SAE flange (J518) Metric thread

Seal class
1 = S1 - BUNA N
4 = S4 - EPDM
5 = S5 - VITON

Design letter

Porting combination (see page 62)
00 = standard

Direction of rotation (view on shaft end)
R = Clockwise
L = Counter-clockwise

INTERNAL LEAKAGE (TYPICAL)

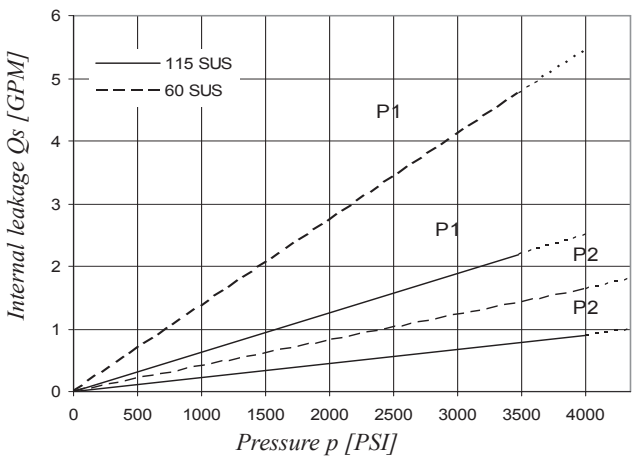

Do not operate pump more than 5 seconds at any speed or viscosity if internal leakage is higher than 50% of theoretical flow. Total leakage is the sum of each section loss at its operating conditions.

NOISE LEVEL (TYPICAL)
T67CB - 014 - B03

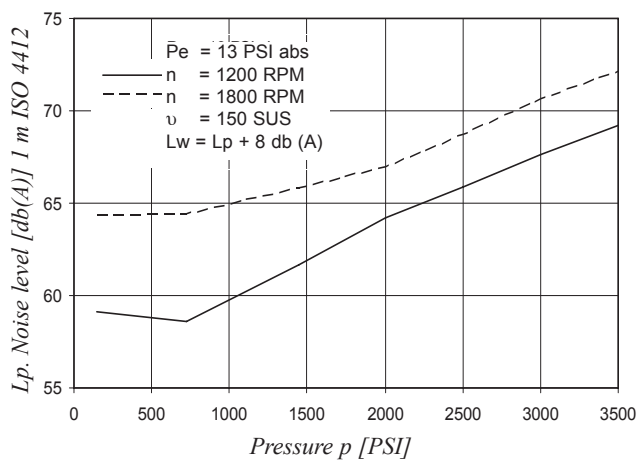

Double pump noise level is given with each section discharging at the pressure noted on the curve.

HYDROMECHANICAL POWER LOSS (TYPICAL)

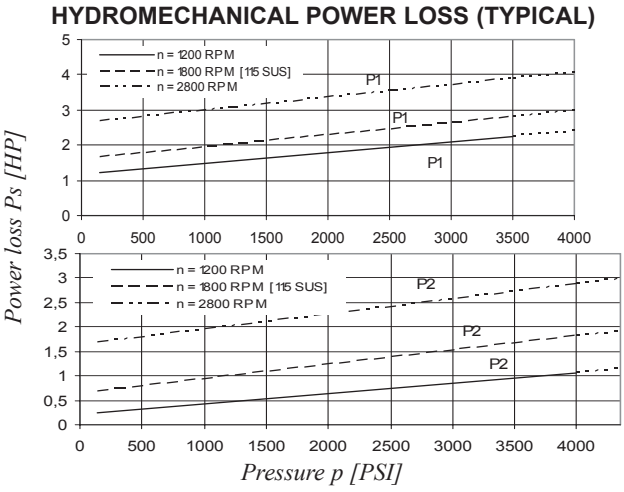

Total hydromechanical power loss is the sum of each section at its operating conditions.

PERMISSIBLE RADIAL LOAD

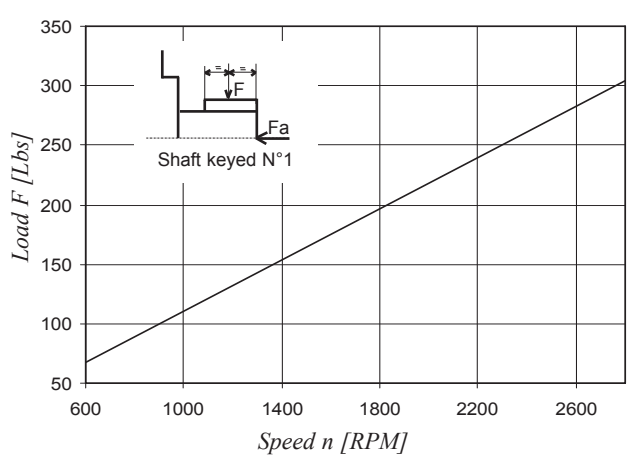

Maximum permissible axial load Fa = 180 Lbs

Back To The Table Of Content

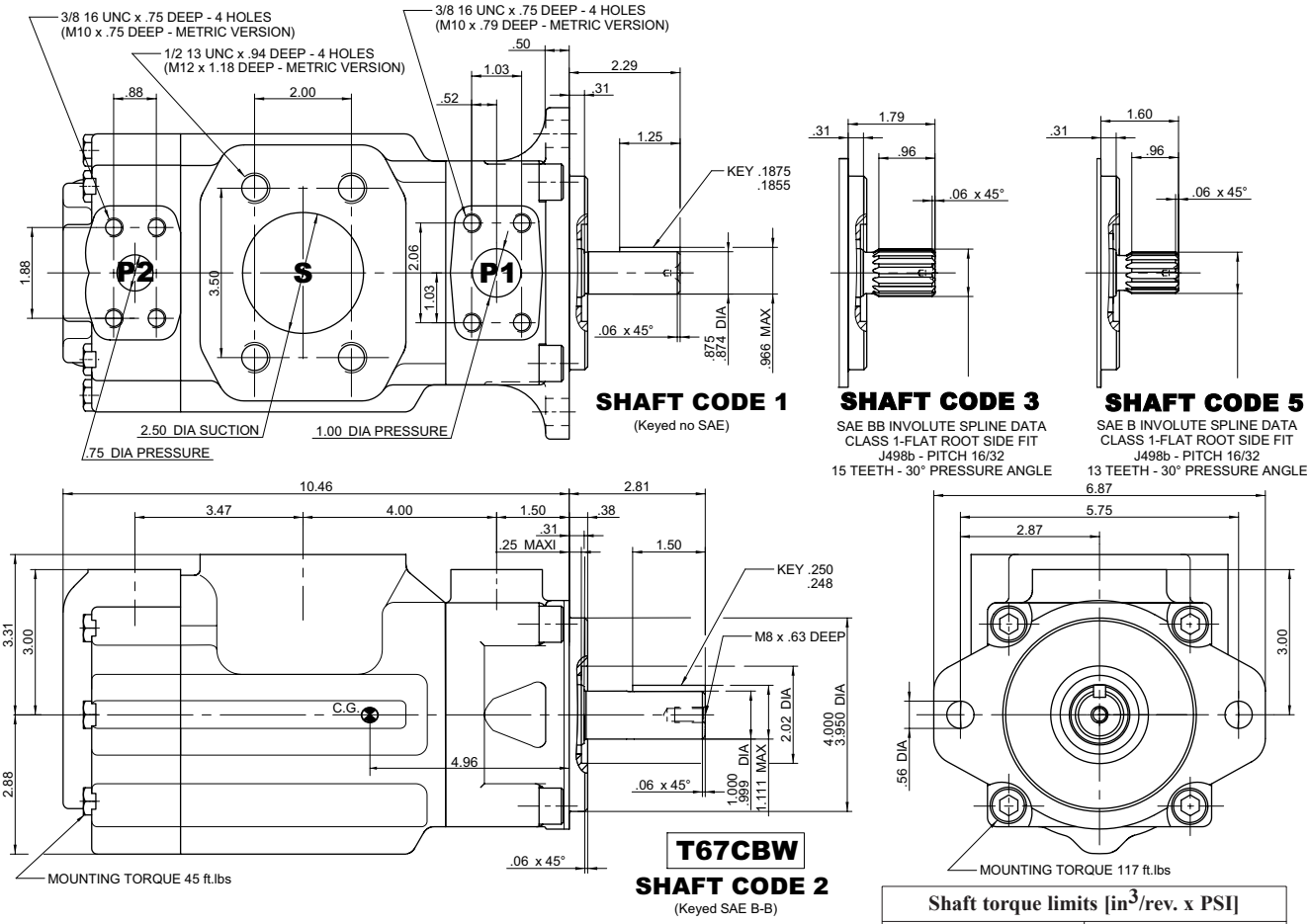

Shaft torque limits [in^3/rev. x PSI]	
Shaft	Vi x p max.
1	12666
2	18972
3	28937
5	18246

OPERATING CHARACTERISTICS – TYPICAL [115 SUS]

Pressure port	Series	Volumetric displacem. Vi	Flow q_{Ve} [GPM] & n = 1800 RPM			Input power P [HP] & n = 1800 RPM		
			p = 0 PSI	p = 2000 PSI	p = 4000 PSI	p = 100 PSI	p = 2000 PSI	p = 4000 PSI
P1	003	.66 in^3/rev	5.14	3.85	-	2.11	8.45	-
	005	1.05 in^3/rev	8.18	6.89	5.68	2.29	12.00	19.81
	006	1.30 in^3/rev	10.13	8.84	7.63	2.40	14.28	23.79
	008	1.61 in^3/rev	12.55	11.26	10.05	2.54	17.11	28.75
	010	2.08 in^3/rev	16.22	14.93	13.71	2.76	21.38	36.22
	012	2.26 in^3/rev	17.64	16.35	15.14	2.84	23.05	39.14
	014	2.81 in^3/rev	21.88	20.59	19.37	3.09	27.99	47.78
	017	3.56 in^3/rev	27.73	26.44	25.22	3.43	34.81	59.73
	020	3.89 in^3/rev	30.34	29.05	27.84	3.58	37.86	65.07
	022	4.29 in^3/rev	33.43	32.14	30.93	3.76	41.47	71.38
	025	4.84 in^3/rev	37.71	36.42	35.21	4.01	46.46	80.12
	028	5.42 in^3/rev	42.23	40.94	40.32 1)	4.27	51.74	76.73 1)
	031	6.10 in^3/rev	47.56	46.27	45.65 1)	4.58	57.95	86.06 1)
			p = 0 PSI	p = 2000 PSI	p = 4350 PSI	p = 100 PSI	p = 2000 PSI	p = 4350 PSI
P2	B02	.35 in^3/rev	2.76	2.33	1.80	0.74	4.02	8.10
	B03	.60 in^3/rev	4.66	4.23	3.70	0.85	6.24	12.93
	B04	.78 in^3/rev	6.09	5.66	5.13	0.94	7.90	16.55
	B05	.97 in^3/rev	7.56	7.13	6.60	1.02	9.62	20.29
	B06	1.21 in^3/rev	9.42	8.99	8.46	1.13	11.79	25.00
	B07	1.37 in^3/rev	10.70	10.27	9.74	1.20	13.29	28.26
	B08	1.52 in^3/rev	11.84	11.41	10.88	1.27	14.62	31.15
	B09	1.71 in^3/rev	13.31	12.87	12.35	1.36	16.35	34.92
	B10	1.94 in^3/rev	15.12	14.69	14.16	1.46	18.45	39.48
	B11	2.13 in^3/rev	16.64	16.19	15.68	1.55	20.17	43.22
	B12	2.50 in^3/rev	19.50	19.07	18.54	1.72	23.55	50.58
	B14	2.75 in^3/rev	21.40	20.95	20.44	1.83	25.80	55.48
	B15	3.05 in^3/rev	23.78	23.35	22.88 2)	1.97	28.55	57.35 2)

- We do not recommand to use this 003 at 4000 PSI & 1500 RPM as the internal is over 50% of theoretical flow.

1) 028 - 031 = 3000 PSI max. int. 2) B15 = 4060 PSI max. int.

Back To The Table Of Content

Model No. **T7DB or T7DBS - B42 - B10 - 1 R 00 - A 1 M1 - ..**

T7DB series - 125 A2 HW
ISO 2 bolts 3019-2 mounting flange
T7DBS series - SAE C 2 bolts
Mounting flange J744

P1 P2

Displacement for "P1"
Volumetric displacement (in^3/rev.)

B14 = 2.68	B31 = 6.05
B17 = 3.36	B35 = 6.92
B20 = 4.03	B38 = 7.36
B22 = 4.29	B42 = 8.39
B24 = 4.95	045 = 8.89
B28 = 5.49	050 = 9.64

Displacement for "P2"
Volumetric displacement (in^3/rev.)

B02 = .35	B09 = 1.71
B03 = .60	B10 = 1.94
B04 = .78	B11 = 2.13
B05 = .97	B12 = 2.50
B06 = 1.21	B14 = 2.75
B07 = 1.37	B15 = 3.05
B08 = 1.52	

Type of shaft T7DBS
1 = keyed (SAE C) 3 = splined (SAE C)
2 = keyed (non SAE) 4 = splined (spec. SAE C)

Type of shaft T7DB - T7DBS
5 = keyed (ISO 3019-2 - G32M)

Modifications

Mounting w/connection variables
4 bolts SAE flanges J518

	Metric thread T7DB - T7DBS		UNC thread T7DBS	
	M0	M1	00	01
P1	1"1/4	1"1/4	1"1/4	1"1/4
P2	1"	3/4"	1"	3/4"
S	3"	3"	3"	3"

Seal class
1 = S1 (for mineral oil)
4 = S4 (for the resistant fluid)
5 = S5 (for mineral oil and fire resistant fluids)

Design letter

Porting combination (see page 62)
00 = standard

Direction of rotation (view on shaft end)
R = Clockwise
L = Counter-clockwise

INTERNAL LEAKAGE (TYPICAL)

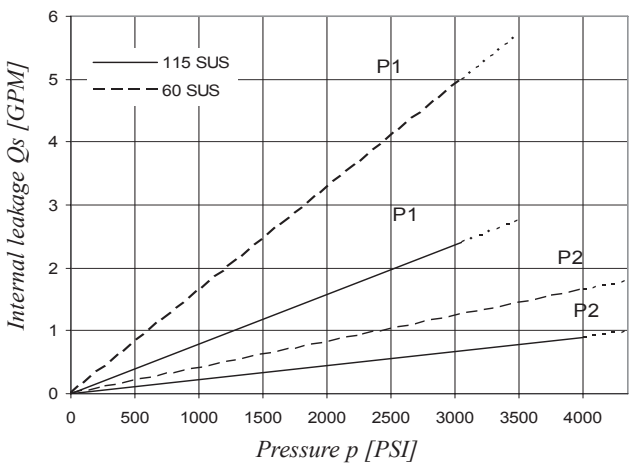

Do not operate pump more than 5 seconds at any speed or viscosity if internal leakage is higher than 50% of theoretical flow. Total leakage is the sum of each section loss at its operating conditions.

NOISE LEVEL (TYPICAL) T7DBS - B31 - B10

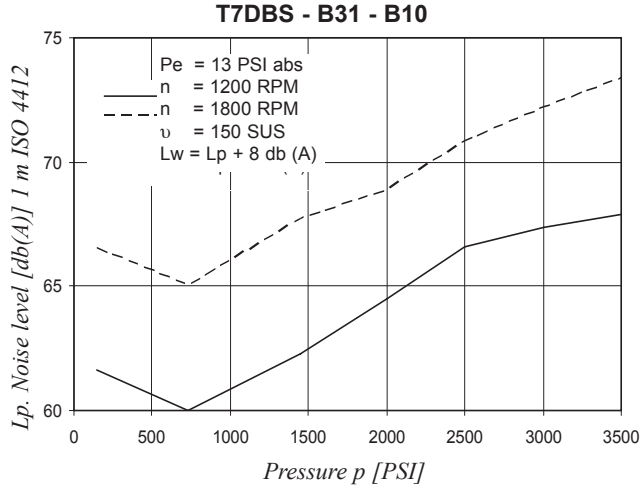

Double pump noise level is given with each section discharging at the pressure noted on the curve.

HYDROMECHANICAL POWER LOSS (TYPICAL)

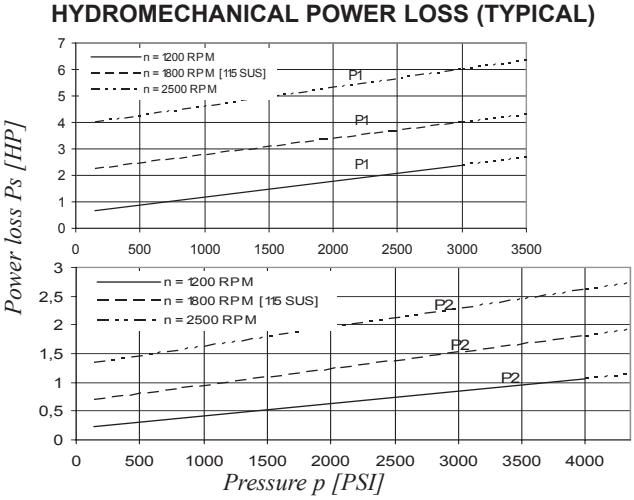

Total hydromechanical power loss is the sum of each section at its operating conditions.

PERMISSIBLE RADIAL LOAD

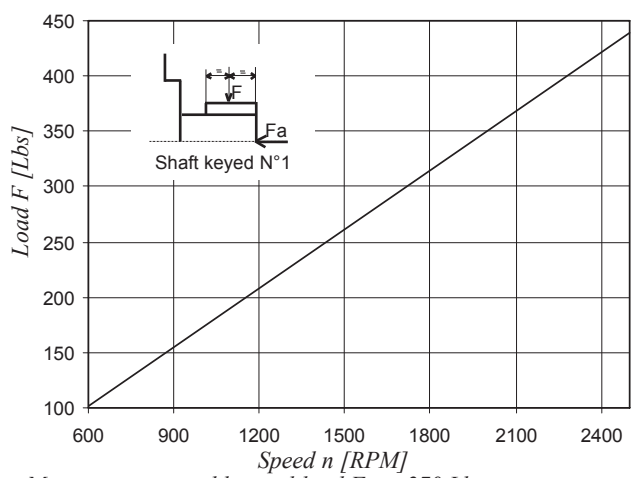

Maximum permissible axial load Fa = 270 Lbs

Back To The Table Of Content

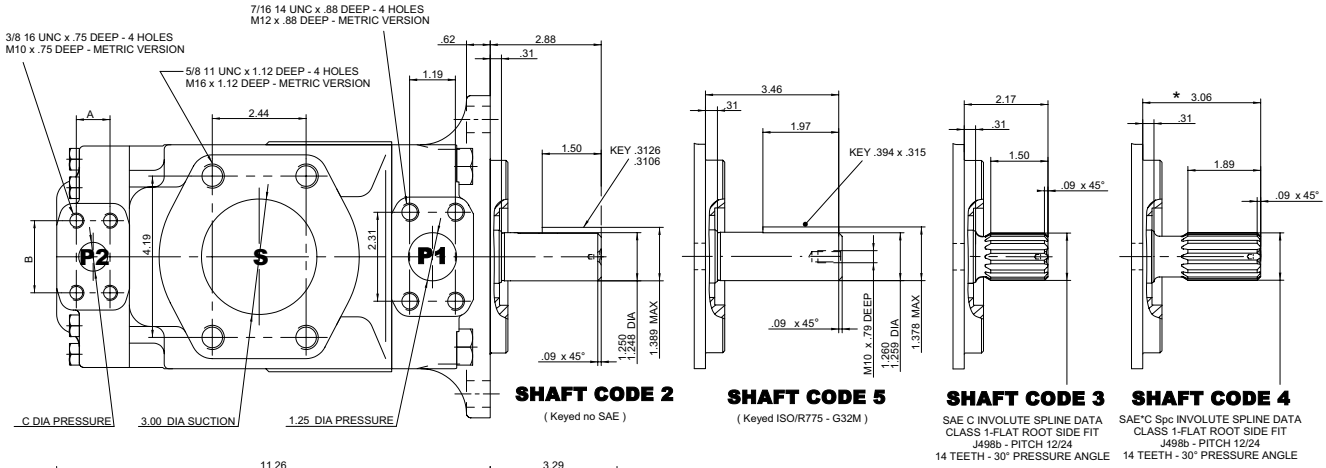

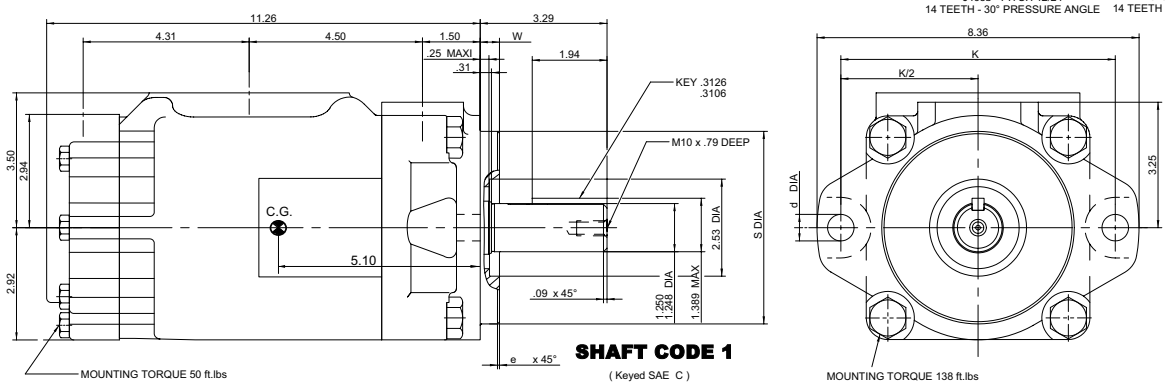

Alternate mounting flange						
Series	S Dia		e x 45°	W	K	d Dia
	Max.	Min.				
T7DB	4.921	4.919	.079	.374	7.087	.709
T7DBS	5.000	4.998	.051	.500	7.126	.689

Alternate connect. variables		
	00 & M0	01 & M1
A	1.03	.87
B	2.06	1.87
C	1.00	.75

Shaft torque limits [in^3/rev. x PSI]	
Shaft	Vi x p max.
1	38299
2	30638
3	54207
4	54207
5	37644

OPERATING CHARACTERISTICS – TYPICAL [115 SUS]

Pressure port	Series	Volumetric displacem. Vi	Flow q_{Ve} [GPM] & n = 1800 RPM			Input power P [HP] & n = 1800 RPM		
			p = 0 PSI	p = 2000 PSI	p = 3630 PSI	p = 100 PSI	p = 2000 PSI	p = 3630 PSI
P1	B14	2.68 in^3/rev	20.92	19.18	17.81	3.46	27.77	47.03
	B17	3.36 in^3/rev	26.16	24.41	23.04	3.77	33.88	57.71
	B20	4.03 in^3/rev	31.39	29.64	28.27	4.07	39.98	68.39
	B22	4.29 in^3/rev	33.43	31.69	30.32	4.19	42.37	72.57
	B24	4.95 in^3/rev	38.57	36.82	35.45	4.49	48.36	83.06
	B28	5.49 in^3/rev	42.80	41.06	39.69	4.74	53.30	91.70
	B31	6.05 in^3/rev	47.18	45.43	44.06	4.99	58.41	100.63
	B35	6.92 in^3/rev	53.93	52.18	50.81	5.39	66.29	114.42
	B38	7.36 in^3/rev	57.35	55.61	54.24	5.59	70.28	121.42
	B42	8.39 in^3/rev	65.39	63.65	62.28	6.05	79.66	137.83
	045	8.89 in^3/rev	69.29	67.11	65.31	6.74	83.75	145.79
	050	9.64 in^3/rev	75.14	72.96	71.78 1)	7.08	90.58	134.50 1)
			p = 0 PSI	p = 2000 PSI	p = 4350 PSI	p = 100 PSI	p = 2000 PSI	p = 4350 PSI
P2	B02	.35 in^3/rev	2.76	2.33	1.80	0.74	4.02	8.10
	B03	.60 in^3/rev	4.66	4.23	3.70	0.85	6.24	12.93
	B04	.78 in^3/rev	6.09	5.66	5.13	0.94	7.90	16.55
	B05	.97 in^3/rev	7.56	7.13	6.60	1.02	9.62	20.29
	B06	1.21 in^3/rev	9.42	8.99	8.46	1.13	11.79	25.00
	B07	1.37 in^3/rev	10.70	10.27	9.74	1.20	13.29	28.26
	B08	1.52 in^3/rev	11.84	11.41	10.88	1.27	14.62	31.15
	B09	1.71 in^3/rev	13.31	12.87	12.35	1.36	16.35	34.92
	B10	1.94 in^3/rev	15.12	14.69	14.16	1.46	18.45	39.48
	B11	2.13 in^3/rev	16.64	16.19	15.68	1.55	20.17	43.22
	B12	2.50 in^3/rev	19.50	19.07	18.54	1.72	23.55	50.58
	B14	2.75 in^3/rev	21.40	20.95	20.44	1.83	25.80	55.48
	B15	3.05 in^3/rev	23.78	23.35	22.88 2)	1.97	28.55	57.35 2)

1) 050 = 3000 PSI max. int. 2) B15 = 4060 PSI max. int.

Back To The Table Of Content

Model No. **T67DC W - B42 - 010 - 1 R 00 - A 1 - M1 - ..**

Series - SAE C 2 bolts
Mounting Flange J744

Severe duty shaft

Displacement for "P1"
Volumetric displacement (in^3/rev)

B14 = 2.68	B31 = 6.05
B17 = 3.36	B35 = 6.92
B20 = 4.03	B38 = 7.36
B22 = 4.29	B42 = 8.39
B24 = 4.95	045 = 8.89
B28 = 5.49	050 = 9.64

Displacement for "P2"
Volumetric displacement (in^3/rev)

003 = .66	017 = 3.56
005 = 1.05	020 = 3.89
006 = 1.30	022 = 4.29
008 = 1.61	025 = 4.84
010 = 2.08	028 = 5.42
012 = 2.26	031 = 6.10
014 = 2.81	

Type of shaft
1 = keyed (SAE C) 3 = splined (SAE C)
2 = keyed (non SAE) 4 = splined (spec. SAE C)

Type of shaft - Severe duty (T67DCW only)
5 = keyed (non SAE)

Modifications

Mounting w/connection variables
4 bolts SAE flange J518

	Metric thread		UNC thread	
	M0	M1	00	01
P1	1"1/4	1"1/4	1"1/4	1"1/4
P2	1"	3/4"	1"	3/4"
S	3"	3"	3"	3"

Seal class
1 = S1 - BUNA N
4 = S4 - EPDM
5 = S5 - VITON

Design letter

Porting combination (see page 62)
00 = standard

Direction of rotation (view on shaft end)
R = Clockwise
L = Counter-clockwise

INTERNAL LEAKAGE (TYPICAL)

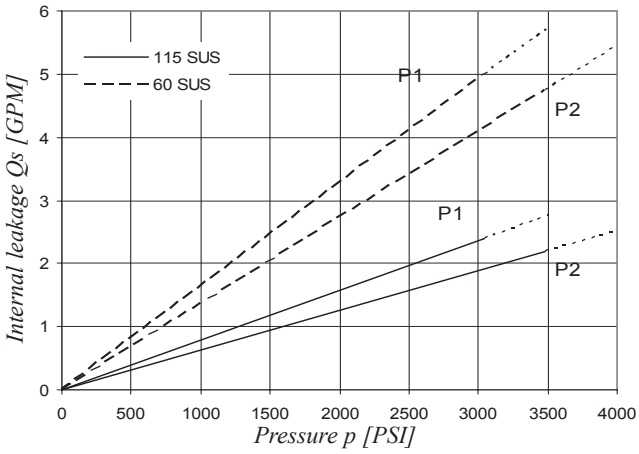

Do not operate pump more than 5 seconds at any speed or viscosity if internal leakage is higher than 50% of theoretical flow. Total leakage is the sum of each section loss at its operating conditions.

NOISE LEVEL (TYPICAL)
T67DC - B31 - 022

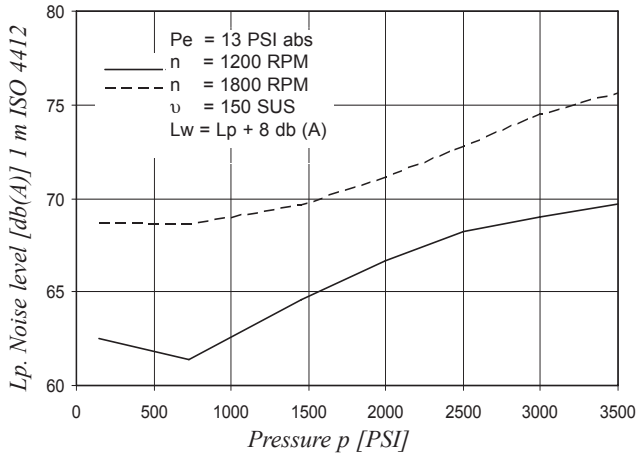

Double pump noise level is given with each section discharging at the pressure noted on the curve.

HYDROMECHANICAL POWER LOSS (TYPICAL)

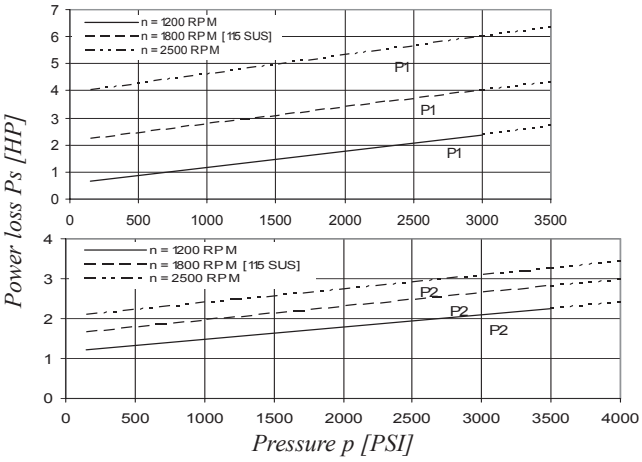

Total hydromechanical power loss is the sum of each section at its operating conditions.

PERMISSIBLE RADIAL LOAD

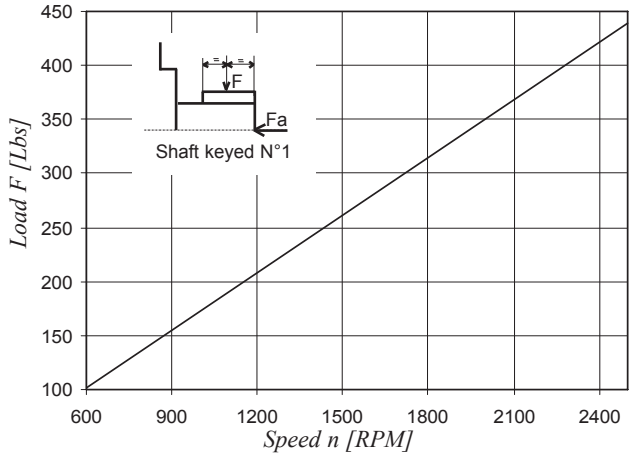

Maximum permissible axial load Fa = 270 Lbs

Back To The Table Of Content

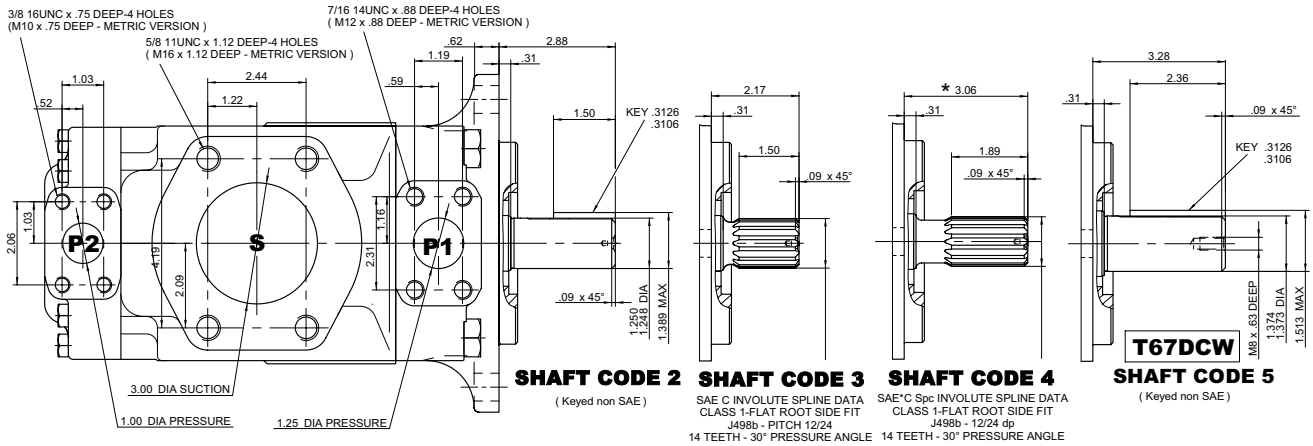

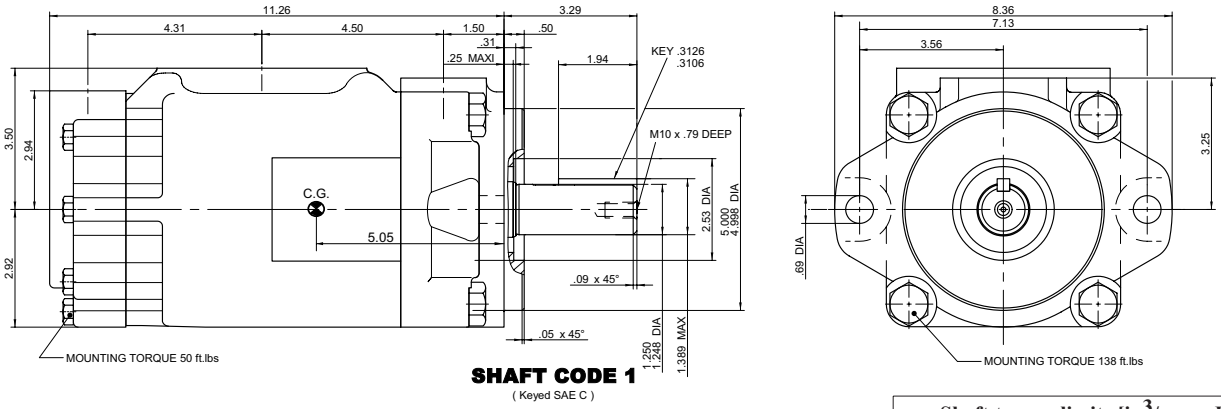

Shaft torque limits [in^3/rev. x PSI]	
Shaft	Vi x p max.
1	38299
2	30638
3	54207
4	54207
5	49247

OPERATING CHARACTERISTICS – TYPICAL [115 SUS]

Pressure port	Series	Volumetric displacem. Vi	Flow q_{Ve} [l/min] & n = 1800 RPM			Input power P [kW] & n = 1800 RPM		
			p = 0 PSI	p = 2000 PSI	p = 3630 PSI	p = 100 PSI	p = 2000 PSI	p = 3630 PSI
P1	B14	2.68 in^3/rev	20.92	19.18	17.81	3.46	27.77	47.03
	B17	3.36 in^3/rev	26.16	24.41	23.04	3.77	33.88	57.71
	B20	4.03 in^3/rev	31.39	29.64	28.27	4.07	39.98	68.39
	B22	4.29 in^3/rev	33.43	31.69	30.32	4.19	42.37	72.57
	B24	4.95 in^3/rev	38.57	36.82	35.45	4.49	48.36	83.06
	B28	5.49 in^3/rev	42.80	41.06	39.69	4.74	53.30	91.70
	B31	6.05 in^3/rev	47.18	45.43	44.06	4.99	58.41	100.63
	B35	6.92 in^3/rev	53.93	52.18	50.81	5.39	66.29	114.42
	B38	7.36 in^3/rev	57.35	55.61	54.24	5.59	70.28	121.42
	B42	8.39 in^3/rev	65.39	63.65	62.28	6.05	79.66	137.83
	045	8.89 in^3/rev	69.29	67.11	65.31	6.74	83.75	145.79
	050	9.64 in^3/rev	75.14	72.96	71.78 1)	7.08	90.58	134.50 1)
			p = 0 PSI	p = 2000 PSI	p = 4000 PSI	p = 100 PSI	p = 2000 PSI	p = 4000 PSI
P2	003	.66 in^3/rev	5.14	3.85	-	2.11	8.45	-
	005	1.05 in^3/rev	8.18	6.89	5.68	2.29	12.00	19.81
	006	1.30 in^3/rev	10.13	8.84	7.63	2.40	14.28	23.79
	008	1.61 in^3/rev	12.55	11.26	10.05	2.54	17.11	28.75
	010	2.08 in^3/rev	16.22	14.93	13.71	2.76	21.38	36.22
	012	2.26 in^3/rev	17.64	16.35	15.14	2.84	23.05	39.14
	014	2.81 in^3/rev	21.88	20.59	19.37	3.09	27.99	47.78
	017	3.56 in^3/rev	27.73	26.44	25.22	3.43	34.81	59.73
	020	3.89 in^3/rev	30.34	29.05	27.84	3.58	37.86	65.07
	022	4.29 in^3/rev	33.43	32.14	30.93	3.76	41.47	71.38
	025	4.84 in^3/rev	37.71	36.42	35.21	4.01	46.46	80.12
	028	5.42 in^3/rev	42.23	40.94	40.32 1)	4.27	51.74	76.73 1)
	031	6.10 in^3/rev	47.56	46.27	45.65 1)	4.58	57.95	86.06 1)

- We do not recommand to use this 003 at 4000 PSI & 1500 RPM as the internal leakage is over 50% of theoretical flow.

1) 050 – 028 – 031 = 3000 PSI max. int.

Back To The Table Of Content

Model No. **T7DD or T7DDS - B42 - B22 - 1 R 00 - A 1 - M0 - ..**

T7DD series - ISO 4 bolts 3019-2
Mounting flange 125-B4 HW
T7DDS series - SAE-C 6 bolts
Mounting flange J744

P1 P2

Displacement for "P1" & "P2"
Volumetric displacement (in^3/rev)

B14 = 2.68	B31 = 6.05
B17 = 3.36	B35 = 6.92
B20 = 4.03	B38 = 7.36
B22 = 4.29	B42 = 8.39
B24 = 4.95	045 = 8.89
B28 = 5.49	050 = 9.64

Type of shaft - T7DDS only
1 = keyed (SAE C)
2 = keyed (SAE CC)
3 = splined (SAE C)
4 = splined (SAE BB)

Type of shaft T7DD and T7DDS
5 = keyed (ISO 3019-2 - G32M)

Modifications

Mounting w/connection variables
4 bolts SAE flange J518

	P1 & P2 = 1"1/4 - S = 4"	
Type	UNC	Metric
T7DD		M0
T7DDS	00	M0

Seal class
1 = S1 (for mineral oil)
4 = S4 (for the resistant fluid)
5 = S5 (for mineral oil and fire resistant fluids)

Design letter

Porting combination (see page 62)
00 = standard

Direction of rotation (view on shaft end)
R = Clockwise
L = Counter-clockwise

INTERNAL LEAKAGE (TYPICAL)

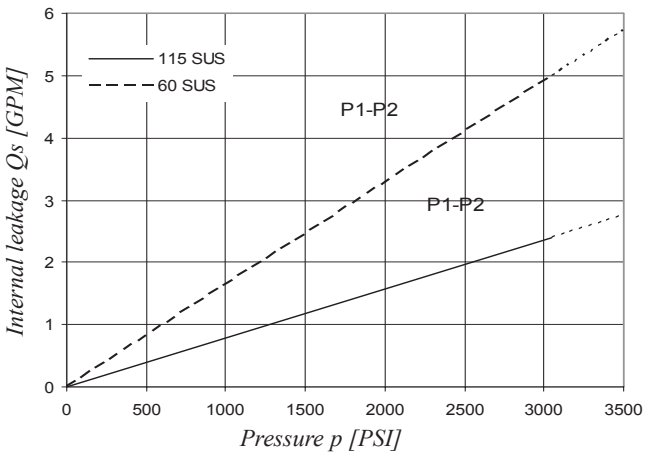

Do not operate pump more than 5 seconds at any speed or viscosity if internal leakage is higher than 50% of theoretical flow. Total leakage is the sum of each section loss at its operating conditions.

NOISE LEVEL (TYPICAL)
T7DDS - B31 - B31

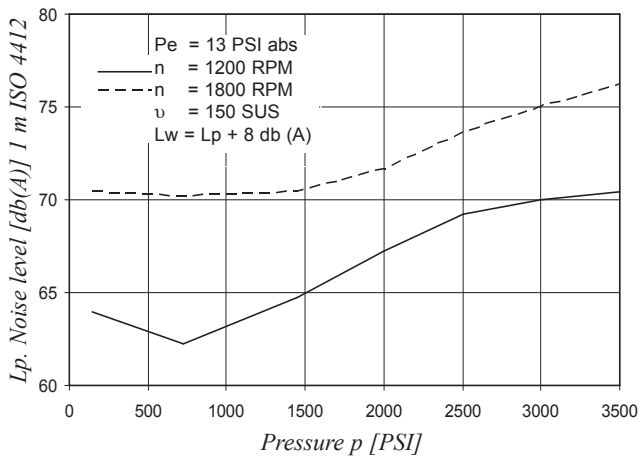

Double pump noise level is given with each section discharging at the pressure noted on the curve.

HYDROMECHANICAL POWER LOSS (TYPICAL)

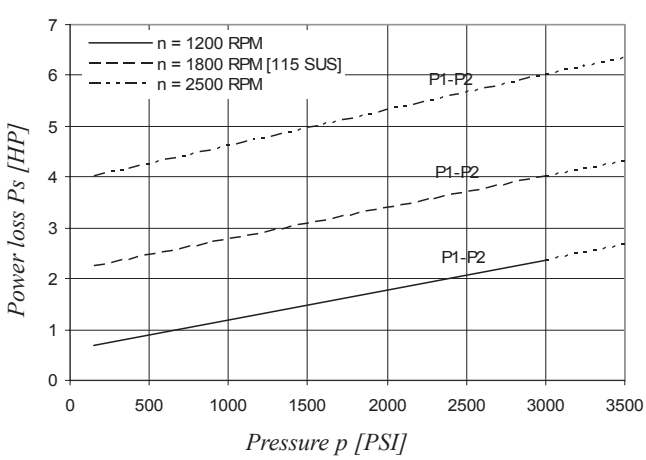

Total hydromechanical power loss is the sum of each section at its operating conditions.

PERMISSIBLE RADIAL LOAD

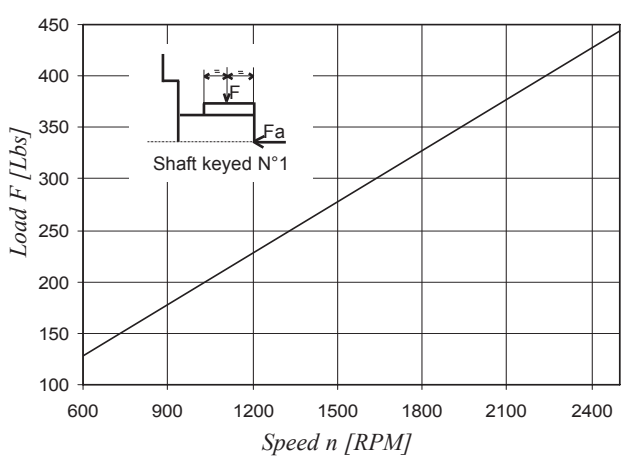

Maximum permissible axial load Fa = 180 Lbs

Back To The Table Of Content

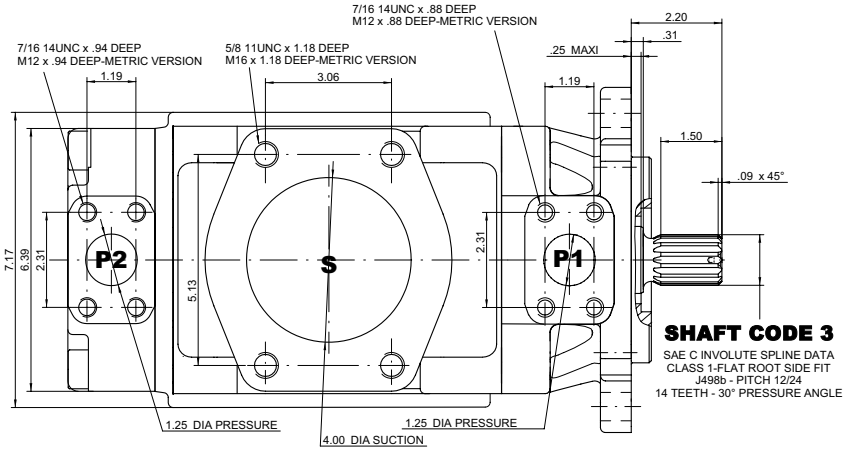

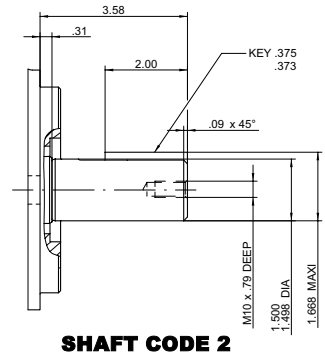

SHAFT CODE 2
Keyed SAE CC

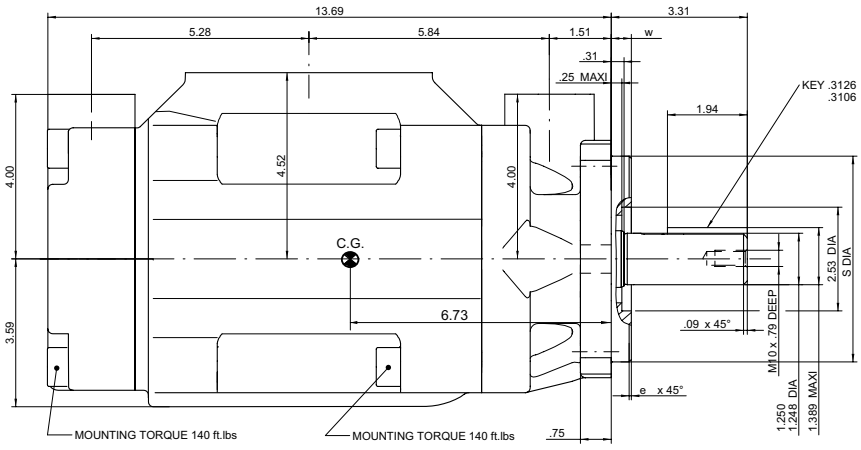

SHAFT CODE 1
Keyed SAE C

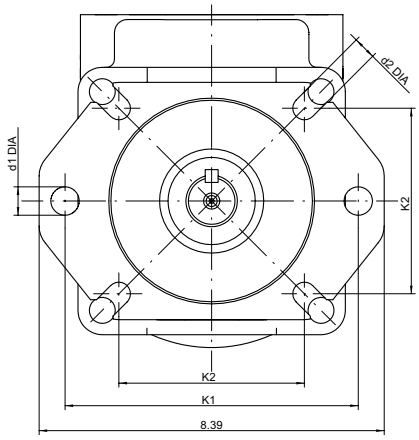

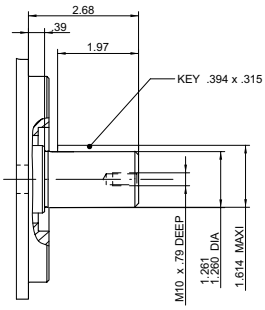

SHAFT CODE 5
Keyed ISO 3019/2 -G32M

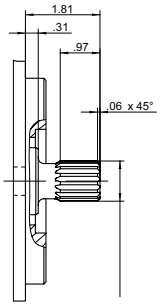

SHAFT CODE 4
SAE BB INVOLUTE SPLINE DATA
CLASS 1-FLAT ROOT SIDE FIT
J498b - PITCH 12/24
15 TEETH - 30° PRESSURE ANGLE

Alternate mounting flange								
Series	S DIA		e x 45°	W	K1	d1 DIA	K2	D2 DIA
	Max.	Min.						
T7DD	4.921	4.919	.079	.374	7.087	.709	4.454	.551
T7DDS	5.000	4.998	.059	.500	7.126	.689	4.508	.563

Shaft torque limits [in^3/rev. x PSI]	
Shaft	Vi x p max.
1	38299
2	63552
3	54207
4	31780
5	40035

OPERATING CHARACTERISTICS – TYPICAL [115 SUS]

Pressure port	Series	Volumetric displacem. Vi	Flow q_{Ve} [GPM] & n = 1800 RPM			Input power P [HP] & n = 1800 RPM		
			p = 0 PSI	p = 2000 PSI	p = 3630 PSI	p = 100 PSI	p = 2000 PSI	p = 3630 PSI
P1 & P2	B14	2.68 in^3/rev	20.92	19.18	17.81	3.46	27.77	47.03
	B17	3.36 in^3/rev	26.16	24.41	23.04	3.77	33.88	57.71
	B20	4.03 in^3/rev	31.39	29.64	28.27	4.07	39.98	68.39
	B22	4.29 in^3/rev	33.43	31.69	30.32	4.19	42.37	72.57
	B24	4.95 in^3/rev	38.57	36.82	35.45	4.49	48.36	83.06
	B28	5.49 in^3/rev	42.80	41.06	39.69	4.74	53.30	91.70
	B31	6.05 in^3/rev	47.18	45.43	44.06	4.99	58.41	100.63
	B35	6.92 in^3/rev	53.93	52.18	50.81	5.39	66.29	114.42
	B38	7.36 in^3/rev	57.35	55.61	54.24	5.59	70.28	121.42
	B42	8.39 in^3/rev	65.39	63.65	62.28	6.05	79.66	137.83
	045	8.89 in^3/rev	69.29	67.11	65.31	6.74	83.75	145.79
	050	9.64 in^3/rev	75.14	72.96	71.78 1)	7.08	90.58	134.50 1)

1) 050 = 3000 PSI max. int.

Back To The Table Of Content

Model No. **T7EB - T7EBS - 042 - B12 - 1 R 00 - A 1 M1 - ..**

T7EB series - ISO 4 bolts 3019-2
Mounting flange 125-A2 HW
T7EBS series - SAE-C 2 bolts
Mounting flange J744

Displacement for "P1"
Volumetric displacement (in^3/rev)

042 = 8.07	057 = 11.18
045 = 8.70	062 = 12.00
050 = 9.67	066 = 13.00
052 = 10.00	072 = 13.86
054 = 10.43	085 = 16.40

Displacement for "P2"
Volumetric displacement (in^3/rev)

B02 = .35	B09 = 1.71
B03 = .60	B10 = 1.94
B04 = .78	B11 = 2.13
B05 = .97	B12 = 2.50
B06 = 1.21	B14 = 2.75
B07 = 1.37	B15 = 3.05
B08 = 1.52	

Type of shaft T7EB and T7EBS
5 = keyed (ISO/R 775 - G38M)

Type of shaft T7EBS
1 = keyed (SAE CC) 3 = splined (SAE C)
2 = keyed (non SAE) 4 = splined (SAE CC)

Modifications

Mounting w/connection variables
4 bolts SAE flange J518

P1 = 1"1/2 - P2 = 3/4" - S = 3"1/2		
	T7EBS	T7EB - T7EBS
Type	UNC	Metric
Code	01	M1

Seal class
1 = S1 (for mineral oil)
4 = S4 (for the resistant fluid)
5 = S5 (for mineral oil and fire resistant fluids)

Design letter

Porting combination (see page 62)
00 = standard

Direction of rotation (view on shaft end)
R = Clockwise
L = Counter-clockwise

INTERNAL LEAKAGE (TYPICAL)

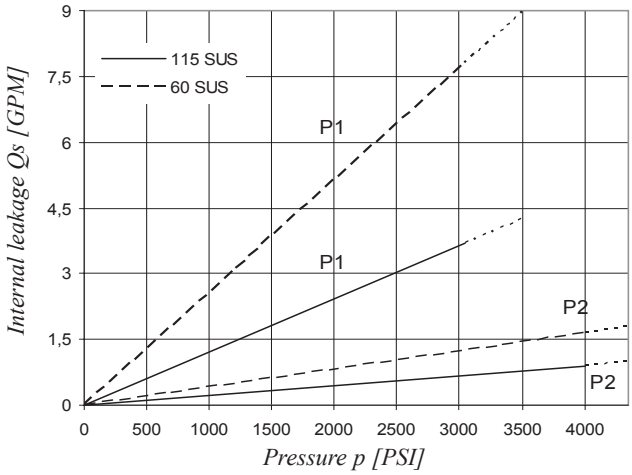

Do not operate pump more than 5 seconds at any speed or viscosity if internal leakage is higher than 50% of theoretical flow. Total leakage is the sum of each section loss at its operating conditions.

NOISE LEVEL (TYPICAL)
T7EBS 050 - B03

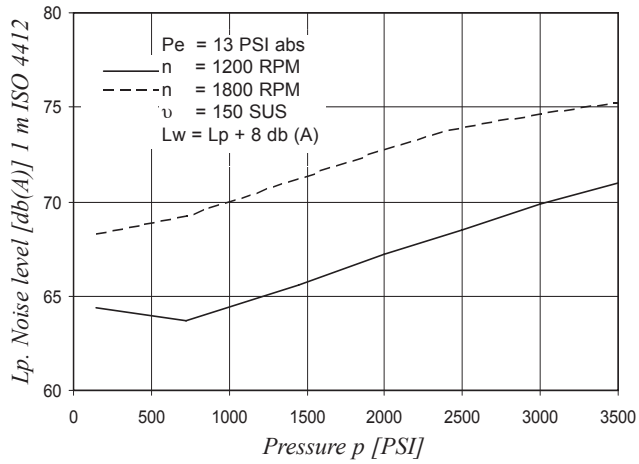

Double pump noise level is given with each section discharging at the pressure noted on the curve.

HYDROMECHANICAL POWER LOSS (TYPICAL)

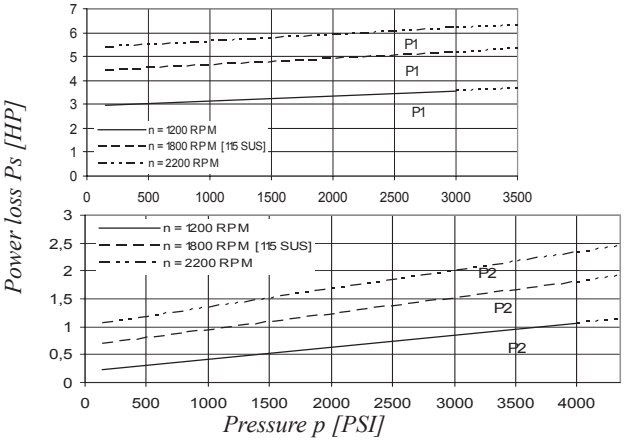

Total hydromechanical power loss is the sum of each section at its operating conditions.

PERMISSIBLE RADIAL LOAD

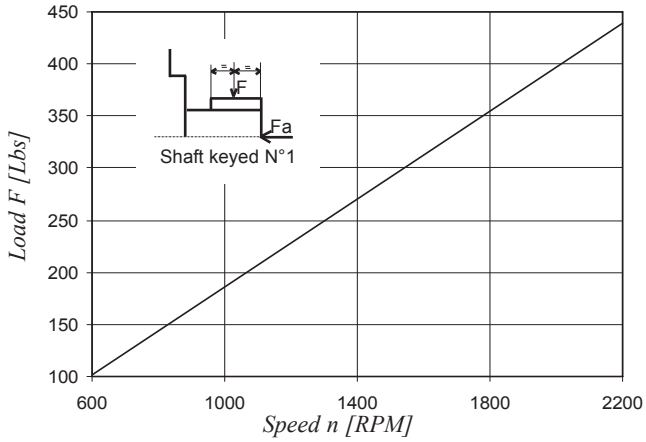

Maximum permissible axial load Fa = 449 Lbs

Back To The Table Of Content

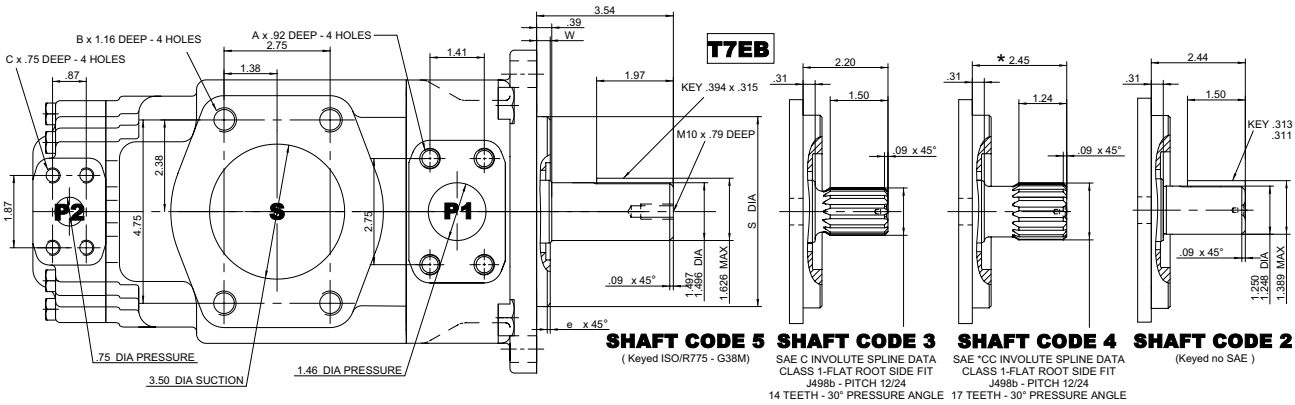

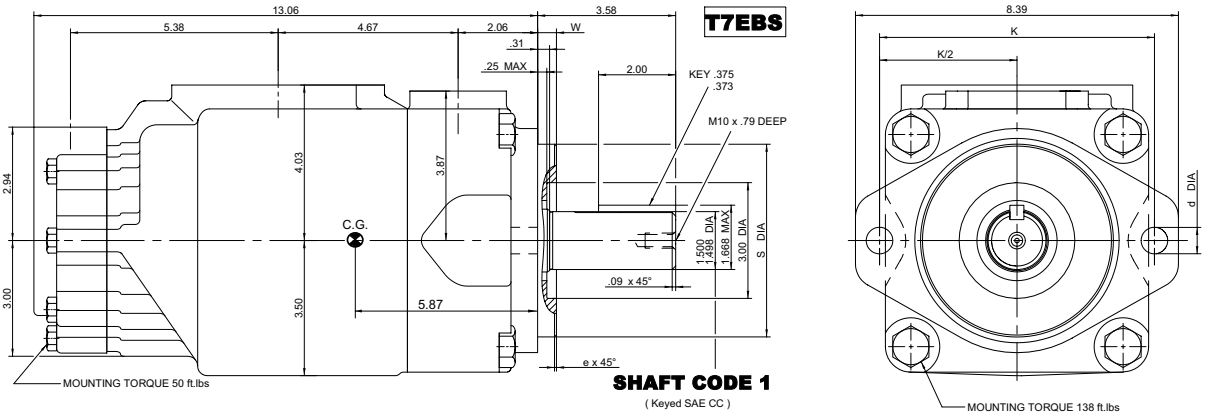

Alternate mounting flange						
Series	S Dia		e x 45°	W	K	D Dia
	Max.	Min.				
T7EB	4.921	4.919	.079	.374	7.087	.709
T7EBS	5.000	4.998	.051	.500	7.126	.689

Alternate connect. variables		
	01	M1
A	1/2 - 13 UNC	M12
B	5/8 – 11 UNC	M16
C	3/8 – 16 UNC	M10

Shaft torque limits [in^3/rev. x bar]	
Shaft	Vi x p max.
1	60673
2	30638
3	54207
4	60673
5	60673

OPERATING CHARACTERISTICS – TYPICAL [115 SUS]

Pressure port	Series	Volumetric displacem. Vi	Flow q_{Ve} [GPM] & n = 1800 RPM			Input power P [HP] & n = 1800 RPM		
			p = 0 PSI	p = 2000 PSI	p = 3500 PSI	p = 100 PSI	p = 2000 PSI	p = 3500 PSI
P1	042	8.07 in^3/rev	62.92	60.37	58.52	8.09	78.44	133.80
	045	8.70 in^3/rev	67.72	65.17	63.32	8.37	84.04	143.60
	050	9.67 in^3/rev	75.38	72.83	70.98	8.82	92.97	159.24
	052	10.00 in^3/rev	78.37	75.82	73.97	8.99	96.47	165.36
	054	10.43 in^3/rev	81.27	78.72	76.87	9.17	99.75	177.46
	057	11.18 in^3/rev	87.12	84.57	82.72	9.51	106.57	189.84
	062	12.00 in^3/rev	93.54	90.99	89.14	9.88	114.17	196.34
	066	13.00 in^3/rev	101.44	98.89	97.04	10.34	123.38	212.46
	072	13.86 in^3/rev	108.00	105.45	103.60	10.72	131.04	225.86
	085	16.40 in^3/rev	127.79	126.13 1)	-	11.88	101.66 1)	-
			p = 0 PSI	p = 2000 PSI	p = 4350 PSI	p = 100 PSI	p = 2000 PSI	p = 4350 PSI
P2	B02	.35 in^3/rev	2.76	2.33	1.80	0.74	4.02	8.10
	B03	.60 in^3/rev	4.66	4.23	3.70	0.85	6.24	12.93
	B04	.78 in^3/rev	6.09	5.66	5.13	0.94	7.90	16.55
	B05	.97 in^3/rev	7.56	7.13	6.60	1.02	9.62	20.29
	B06	1.21 in^3/rev	9.42	8.99	8.46	1.13	11.79	25.00
	B07	1.37 in^3/rev	10.70	10.27	9.74	1.20	13.29	28.26
	B08	1.52 in^3/rev	11.84	11.41	10.88	1.27	14.62	31.15
	B09	1.71 in^3/rev	13.31	12.87	12.35	1.36	16.35	34.92
	B10	1.94 in^3/rev	15.12	14.69	14.16	1.46	18.45	39.48
	B11	2.13 in^3/rev	16.64	16.19	15.68	1.55	20.17	43.22
	B12	2.50 in^3/rev	19.50	19.07	18.54	1.72	23.55	50.58
	B14	2.75 in^3/rev	21.40	20.95	20.44	1.83	25.80	55.48
	B15	3.05 in^3/rev	23.78	23.35	22.88 3)	1.97	28.55	57.35 3)

1) 085 = 1300 PSI max. int. 2) B15 = 4060 PSI max. int.

Back To The Table Of Content

Model No. **T67EC - 085 - 020 - 1 R 00 - A 1 00 - ..**

P1 P2

Series SAE-C 2 bolts
Mounting flange J744

Displacement for "P1"
Volumetric displacement (in^3/rev)

042 = 8.07	057 = 11.18
045 = 8.70	062 = 12.00
050 = 9.67	066 = 13.00
052 = 10.00	072 = 13.86
054 = 10.43	085 = 16.40

Displacement for "P2"
Volumetric displacement (in^3/rev)

003 = .66	017 = 3.56
005 = 1.05	020 = 3.89
006 = 1.30	022 = 4.29
008 = 1.61	025 = 4.84
010 = 2.08	028 = 5.42
012 = 2.26	031 = 6.10
014 = 2.81	

Type of shaft
1 = keyed (SAE CC)
2 = keyed (non SAE)
3 = splined (SAE C)
4 = splined (SAE CC)

Modifications

Mounting w/connection variables
4 bolts SAE flange J518

	Metric thread		UNC thread	
	M0	M1	00	01
P1	1"1/2	1"1/2	1"1/2	1"1/2
P2	1"	3/4"	1"	3/4"
S	3"1/2	3"1/2	3"1/2	3"1/2

Seal class
1 = S1 (for mineral oil)
4 = S4 (for the resistant fluid)
5 = S5 (for mineral oil and fire resistant fluids)

Design letter

Porting combination (see page 62)
00 = standard

Direction of rotation (view on shaft end)
R = Clockwise
L = Counter-clockwise

INTERNAL LEAKAGE (TYPICAL)

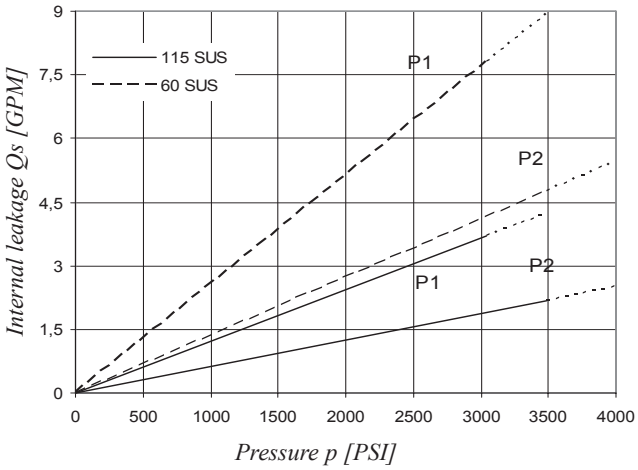

Do not operate pump more than 5 seconds at any speed or viscosity if internal leakage is higher than 50% of theoretical flow. Total leakage is the sum of each section loss at its operating conditions.

NOISE LEVEL (TYPICAL)
T67EC - 050 - 022

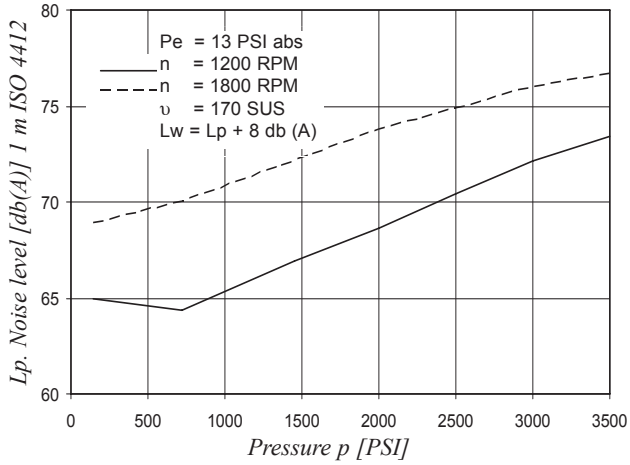

Double pump noise level is given with each section discharging at the pressure noted on the curve.

HYDROMECHANICAL POWER LOSS (TYPICAL)

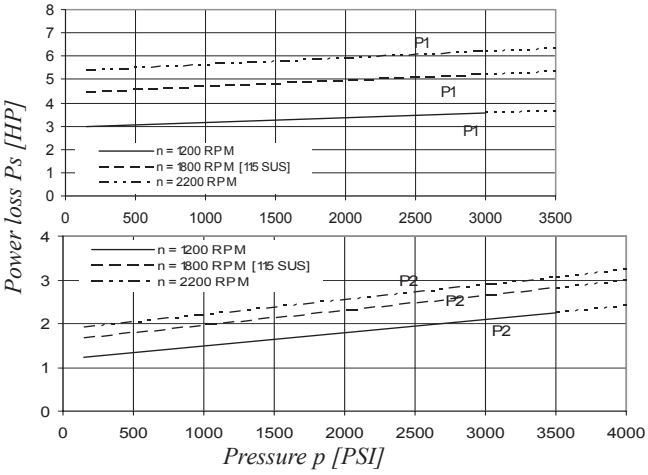

Total hydromechanical power loss is the sum of each section at its operating conditions.

PERMISSIBLE RADIAL LOAD

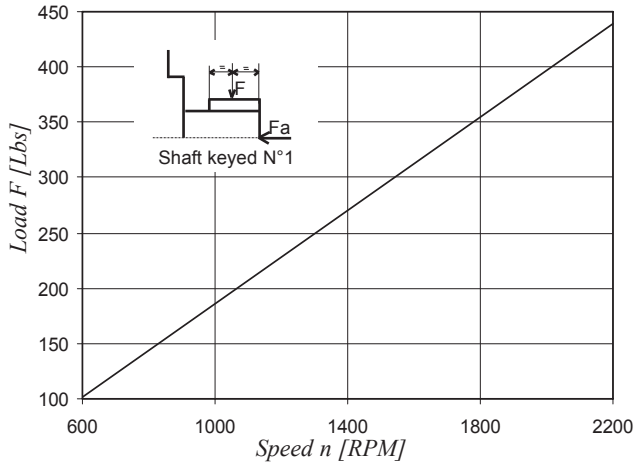

Maximum permissible axial load Fa = 449 Lbs

Back To The Table Of Content

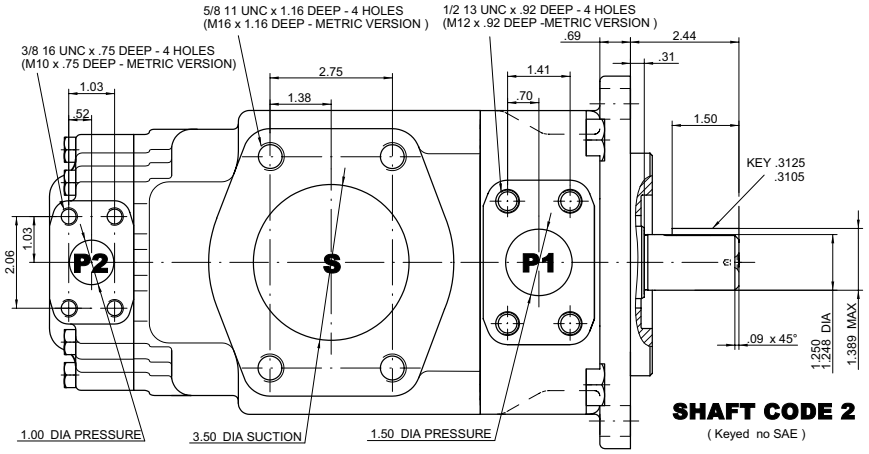

SHAFT CODE 2
(Keyed no SAE)

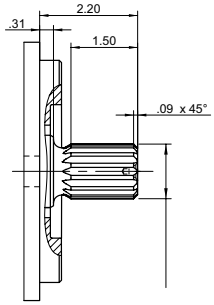

SHAFT CODE 3
SAE C INVOLUTE SPLINE DATA
CLASS 1-FLAT ROOT SIDE FIT
J498b - PITCH 12/24
14 TEETH - 30° PRESSURE ANGLE

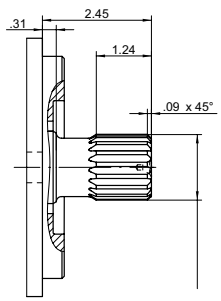

SHAFT CODE 4
SAE CC INVOLUTE SPLINE DATA
CLASS 1-FLAT ROOT SIDE FIT
J498b - PITCH 16/32
17 TEETH - 30° PRESSURE ANGLE

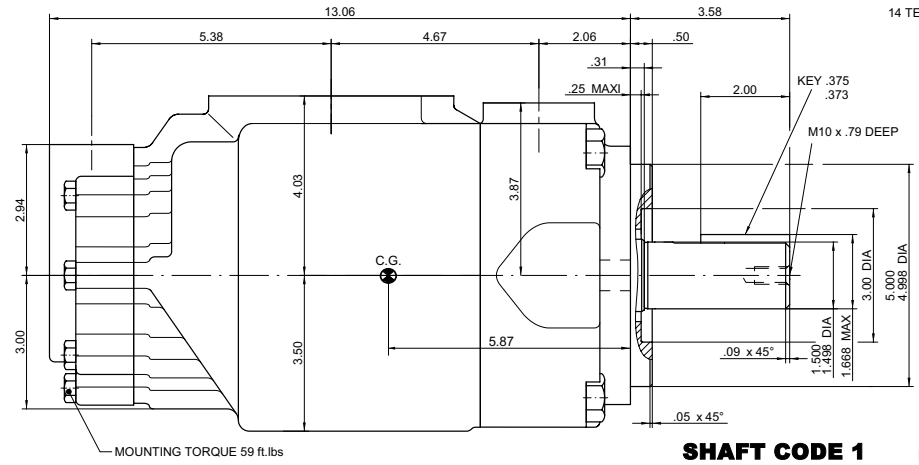

SHAFT CODE 1
(Keyed SAE CC)

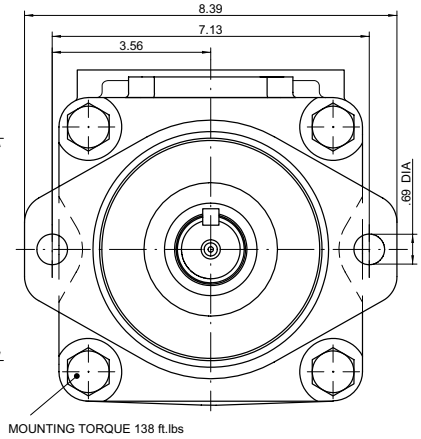

Shaft torque limits [in^3/rev. x PSI]	
Shaft	Vi x p max.
1	64039
2	30638
3	54207
4	67582

OPERATING CHARACTERISTICS – TYPICAL [115 SUS]

Pressure port	Series	Volumetric displacem. Vi	Flow q_{Ve} [GPM] & n = 1800 RPM			Input power P [HP] & n = 1800 RPM		
			p = 0 PSI	p = 2000 PSI	p = 3500 PSI	p = 100 PSI	p = 2000 PSI	p = 3500 PSI
P1	042	8.07 in^3/rev	62.92	60.37	58.52	8.09	78.44	133.80
	045	8.70 in^3/rev	67.72	65.17	63.32	8.37	84.04	143.60
	050	9.67 in^3/rev	75.38	72.83	70.98	8.82	92.97	159.24
	052	10.00 in^3/rev	78.37	75.82	73.97	8.99	96.47	165.36
	054	10.43 in^3/rev	81.27	78.72	76.87	9.17	99.75	177.46
	057	11.18 in^3/rev	87.12	84.57	82.72	9.51	106.57	189.84
	062	12.00 in^3/rev	93.54	90.99	89.14	9.88	114.17	196.34
	066	13.00 in^3/rev	101.44	98.89	97.04	10.34	123.38	212.46
	072	13.86 in^3/rev	108.00	105.45	103.60	10.72	131.04	225.86
	085	16.40 in^3/rev	127.79	126.13 1)	-	11.88	101.66 1)	-
			p = 0 PSI	p = 2000 PSI	p = 4000 PSI	p = 100 PSI	p = 2000 PSI	p = 4000 PSI
P2	003	.66 in^3/rev	5.14	3.85	-	2.11	8.45	-
	005	1.05 in^3/rev	8.18	6.89	5.68	2.29	12.00	19.81
	006	1.30 in^3/rev	10.13	8.84	7.63	2.40	14.28	23.79
	008	1.61 in^3/rev	12.55	11.26	10.05	2.54	17.11	28.75
	010	2.08 in^3/rev	16.22	14.93	13.71	2.76	21.38	36.22
	012	2.26 in^3/rev	17.64	16.35	15.14	2.84	23.05	39.14
	014	2.81 in^3/rev	21.88	20.59	19.37	3.09	27.99	47.78
	017	3.56 in^3/rev	27.73	26.44	25.22	3.43	34.81	59.73
	020	3.89 in^3/rev	30.34	29.05	27.84	3.58	37.86	65.07
	022	4.29 in^3/rev	33.43	32.14	30.93	3.76	41.47	71.38
	025	4.84 in^3/rev	37.71	36.42	35.21	4.01	46.46	80.12
	028	5.42 in^3/rev	42.23	40.94	40.32 2)	4.27	51.74	76.73 2)
	031	6.10 in^3/rev	47.56	46.27	45.65 2)	4.58	57.95	86.06 2)

- We do not recommand to use this 003 at 4000 PSI & 1500 RPM as the internal leakage is over 50% of theoretical flow.
1) 085 = 1300 PSI max. int. 2) 028 – 031 = 3000 PSI max.

Back To The Table Of Content

Model No. **T7ED or T7EDS - 042 - B22 - 1 R 00 - A 1 - M0 - ..**

T7ED series - 125 A2 HW
ISO 2 bolts 3019-2 mounting flange
T7EDS series - SAE C 2 bolts
Mounting flange J744

P1 P2

Displacement for "P1"
Volumetric displacement (in^3/rev)

042 = 8.07	057 = 11.18
045 = 8.70	062 = 12.00
050 = 9.67	066 = 13.00
052 = 10.00	072 = 13.86
054 = 10.43	085 = 16.40

Displacement for "P2"
Volumetric displacement (in^3/rev)

B14 = 2.68	B31 = 6.05
B17 = 3.36	B35 = 6.92
B20 = 4.03	B38 = 7.36
B22 = 4.29	B42 = 8.39
B24 = 4.95	045 = 8.89
B28 = 5.49	050 = 9.64

Type of shaft T7ED - T7EDS
5 = keyed (ISO R775 - G38M)

Type of shaft T7EDS
1 = keyed (SAE CC) 3 = splined (SAE C)
2 = keyed (non SAE) 4 = splined (SAE CC)

Modifications

Mounting w/connection variables
4 bolts SAE flange J518

P1 = 1"1/2 - P2 = 1"1/4 - S = 4"		
	T7EDS	T7ED - T7EDS
Type	UNC	Metric
Code	00	M0

Seal class
1 = S1 (for mineral oil)
4 = S4 (for the resistant fluid)
5 = S5 (for mineral oil and fire resistant fluids)

Design letter

Porting combination (see page 62)
00 = standard

Direction of rotation (view on shaft end)
R = Clockwise
L = Counter-clockwise

INTERNAL LEAKAGE (TYPICAL)

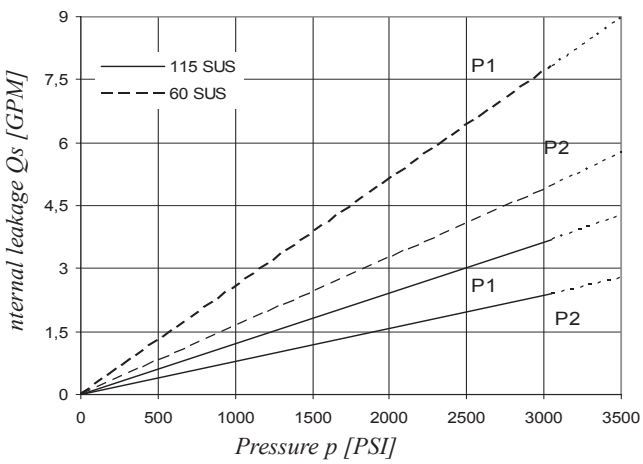

Do not operate pump more than 5 seconds at any speed or viscosity if internal leakage is higher than 50% of theoretical flow. Total leakage is the sum of each section loss at its operating conditions.

NOISE LEVEL (TYPICAL)
T7EDS - 050 - B31

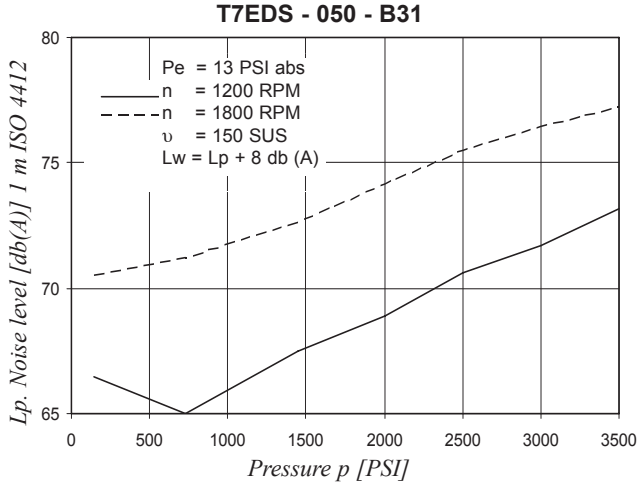

Double pump noise level is given with each section discharging at the pressure noted on the curve.

HYDROMECHANICAL POWER LOSS (TYPICAL)

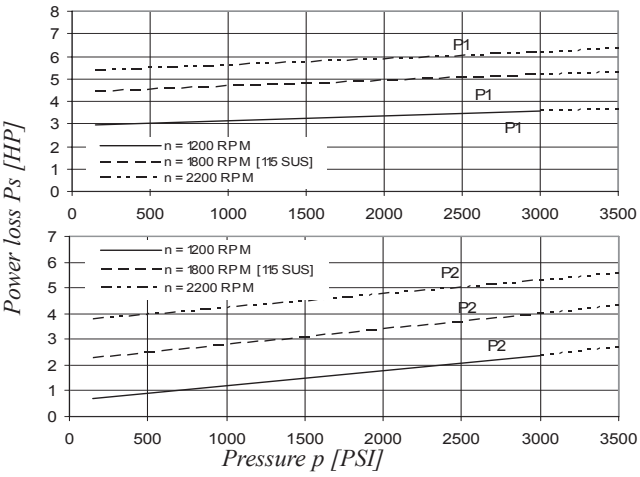

Total hydromechanical power loss is the sum of each section at its operating conditions.

PERMISSIBLE RADIAL LOAD

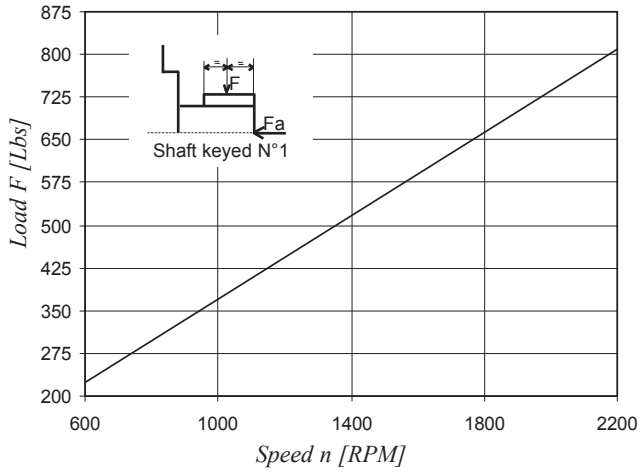

Maximum permissible axial load Fa = 449 Lbs

Back To The Table Of Content

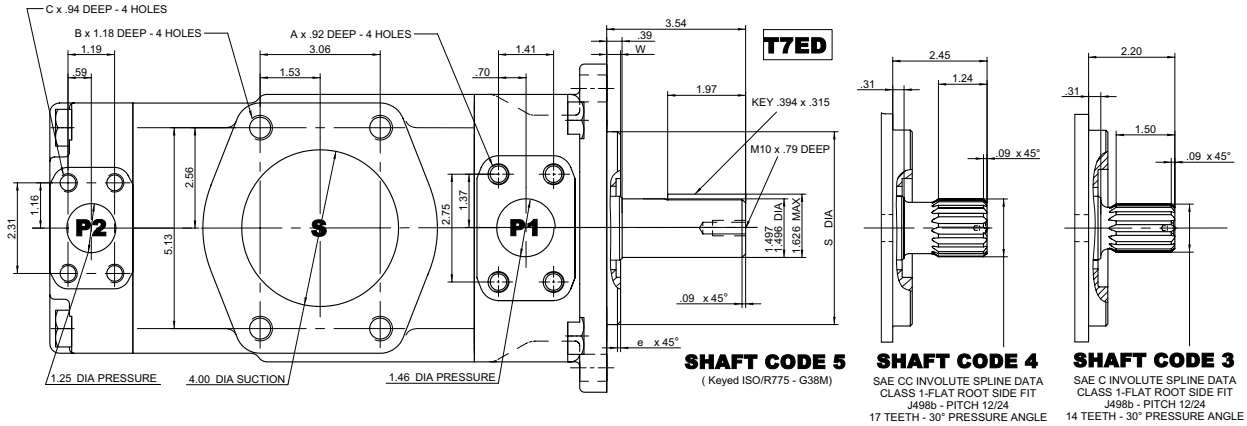

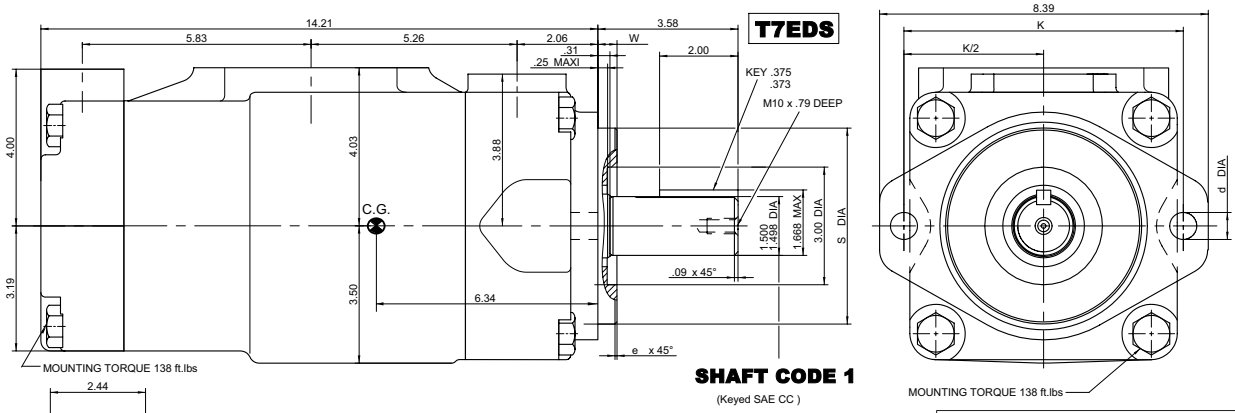

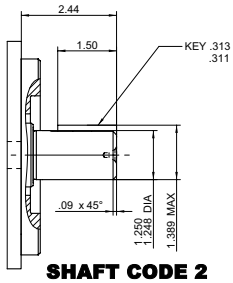

Alternate connect. variables		
	01	M1
A	1/2" - 13 UNC	M12
B	5/8" - 11 UNC	M16
C	7/16" - 14 UNC	M12

Shaft torque limits [in^3/rev. x PSI]	
Shaft	Vi x p max.
1	64039
2	30638
3	54207
4	60673
5	60673

Alternate mounting flange						
Series	S DIA		e x 45°	W	K	d DIA
	Max.	Min.				
T7ED	4.921	4.919	.079	.374	7.087	.709
T7EDS	5.000	4.998	.051	.500	7.126	.689

OPERATING CHARACTERISTICS – TYPICAL [115 SUS]

Pressure port	Series	Volumetric displacem. Vi	Flow q_{ve} [GPM] & n = 1800 RPM			Input power P [HP] & n = 1800 RPM		
			p = 0 PSI	p = 2000 PSI	p = 3500 PSI	p = 100 PSI	p = 2000 PSI	p = 3500 PSI
P1	042	8.07 in^3/rev	62.92	60.37	58.52	8.09	78.44	133.80
	045	8.70 in^3/rev	67.72	65.17	63.32	8.37	84.04	143.60
	050	9.67 in^3/rev	75.38	72.83	70.98	8.82	92.97	159.24
	052	10.00 in^3/rev	78.37	75.82	73.97	8.99	96.47	165.36
	054	10.43 in^3/rev	81.27	78.72	76.87	9.17	99.75	177.46
	057	11.18 in^3/rev	87.12	84.57	82.72	9.51	106.57	189.84
	062	12.00 in^3/rev	93.54	90.99	89.14	9.88	114.17	196.34
	066	13.00 in^3/rev	101.44	98.89	97.04	10.34	123.38	212.46
	072	13.86 in^3/rev	108.00	105.45	103.60	10.72	131.04	225.86
	085	16.40 in^3/rev	127.79	126.13 1)	-	11.88	101.66 1)	-
			p = 0 PSI	p = 2000 PSI	p = 3630 PSI	p = 100 PSI	p = 2000 PSI	p = 3630 PSI
P2	B14	2.68 in^3/rev	20.92	19.18	17.81	3.46	27.77	47.03
	B17	3.36 in^3/rev	26.16	24.41	23.04	3.77	33.88	57.71
	B20	4.03 in^3/rev	31.39	29.64	28.27	4.07	39.98	68.39
	B22	4.29 in^3/rev	33.43	31.69	30.32	4.19	42.37	72.57
	B24	4.95 in^3/rev	38.57	36.82	35.45	4.49	48.36	83.06
	B28	5.49 in^3/rev	42.80	41.06	39.69	4.74	53.30	91.70
	B31	6.05 in^3/rev	47.18	45.43	44.06	4.99	58.41	100.63
	B35	6.92 in^3/rev	53.93	52.18	50.81	5.39	66.29	114.42
	B38	7.36 in^3/rev	57.35	55.61	54.24	5.59	70.28	121.42
	B42	8.39 in^3/rev	65.39	63.65	62.28	6.05	79.66	137.83
	045	8.89 in^3/rev	69.29	67.11	65.31	6.74	83.75	145.79
	050	9.64 in^3/rev	75.14	72.96	71.78 2)	7.08	90.58	134.50 2)

1) 085 = 1300 PSI max. int. 2) 050 = 3000 PSI max. int..

Back To The Table Of Content

Model No. **T7EE or T7EES - 066 - 045 - 1 R 00 - A 1 0 - 00 - ..**

T7EE series - 250 B4HW
ISO 3019-2 mounting flange
T7EES series - SAE E 4 bolts
Mounting flange J744c

Displacement for "P1" & "P2"
Volumetric displacement (in^3/rev)
042 = 8.07
045 = 8.70
050 = 9.67
052 = 10.00
054 = 10.43
057 = 11.18
062 = 12.00
066 = 13.00
072 = 13.86
085 = 16.40

Type of shaft T7EE
2 = keyed G45N (ISO 3019-2)

Type of shaft T7EES
1 = keyed (SAE CC)
3 = splined (SAE CC)
4 = splined (SAE D & E)
5 = keyed (SAE D & E)

Modifications

Mounting w/connection variables

	P1 & P2 = 1"1/2 - S = 4"	
	UNC	Metric
T7EE		M0
T7EES	00	M0

Coupling adaptor
0 = none
2 = SAE B
3 = SAE BB

Seal class
1 = S1 - BUNA N
4 = S4 - EPDM
5 = S5 - VITON

Design letter

Porting combination (see page 62)
00 = standard

Direction of rotation (view on shaft end)
R = Clockwise
L = Counter-clockwise

INTERNAL LEAKAGE (TYPICAL)

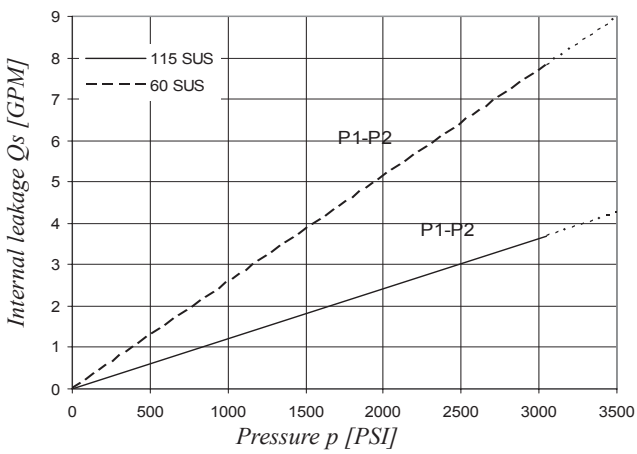

Do not operate pump more than 5 seconds at any speed or viscosity if internal leakage is higher than 50% of theoretical flow. Total leakage is the sum of each section loss at its operating conditions.

NOISE LEVEL (TYPICAL)
T7EE 050 - 050

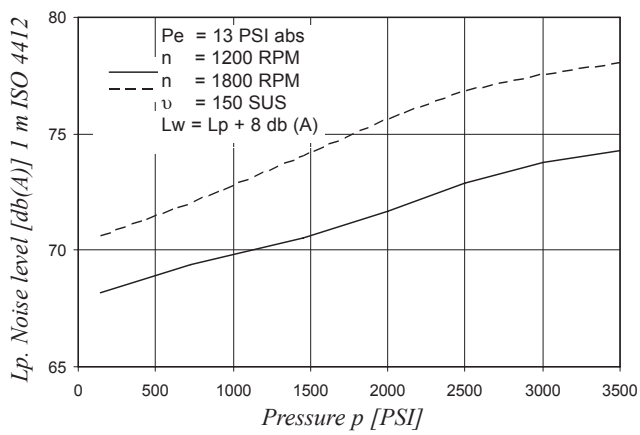

Double pump noise level is given with each section discharging at the pressure noted on the curve.

HYDROMECHANICAL POWER LOSS (TYPICAL)

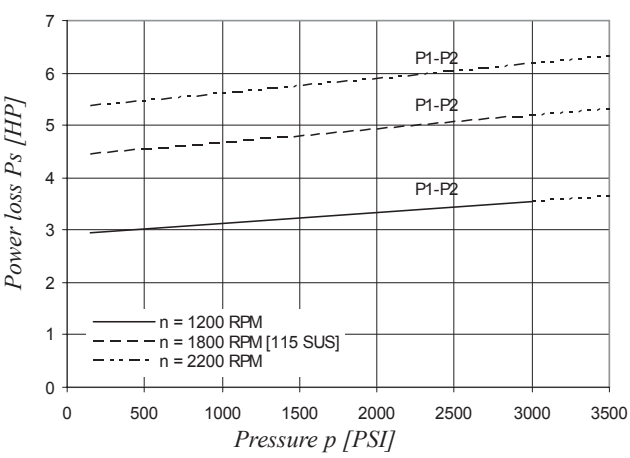

Total hydromechanical power loss is the sum of each section at its operating conditions.

PERMISSIBLE RADIAL LOAD

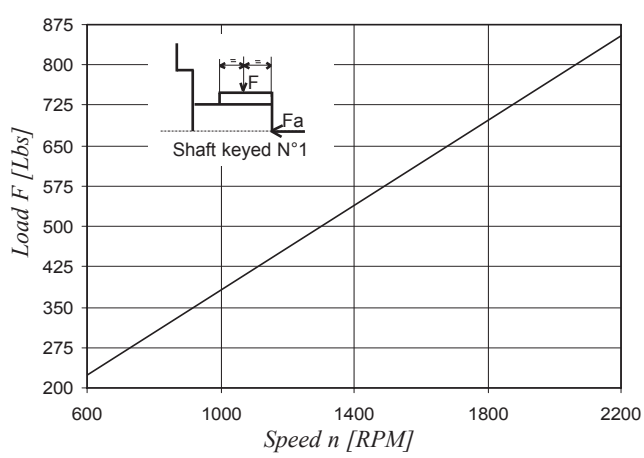

Maximum permissible axial load Fa = 449 Lbs

Back To The Table Of Content

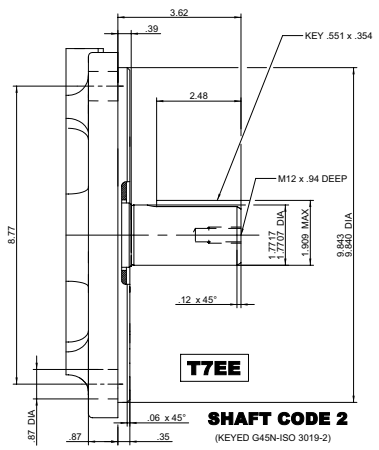

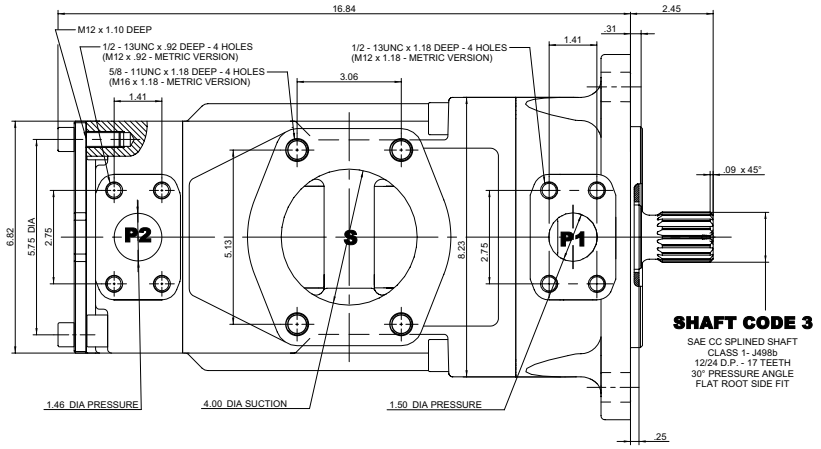

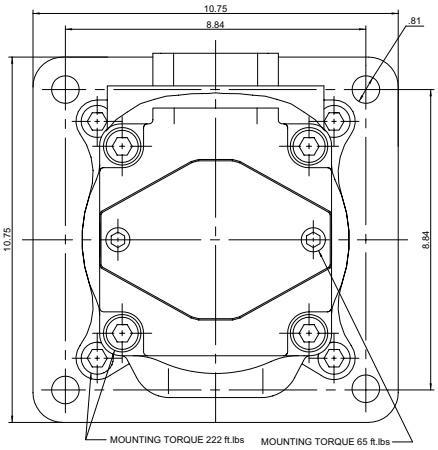

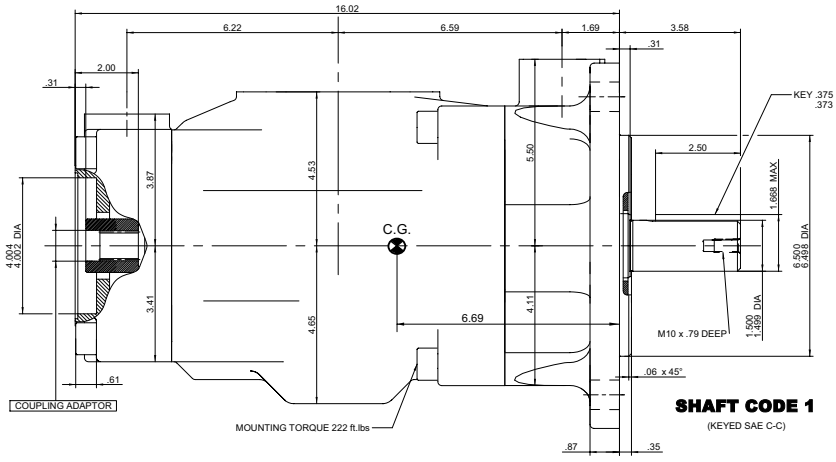

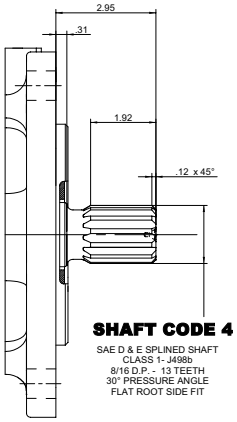

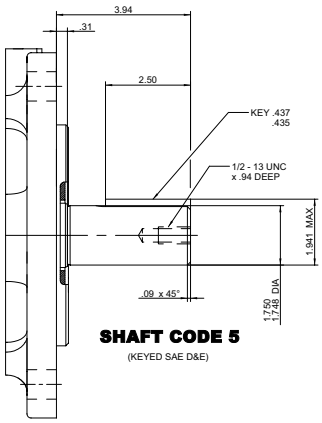

Code	Coupling adaptor
0	Without coupling
2	SAE B - 13 teeth - Pitch 16/32 Major dia. (min.) .875 - Minor dia. (min.) .753
3	SAE BB - 15 teeth - Pitch 16/32 Major dia. (min.) 1.00 - Minor dia (min.) .877

Shaft torque limits [in^3/rev. x PSI]			
Shaft	Vi x p max.	Coupling drive	Vi x p max.
1	80053	SAE B	18246
2	101506	SAE BB	28937
3	112312		
4	112312		
5	104818		

OPERATING CHARACTERISTICS – TYPICAL [115 SUS]

Pressure port	Series	Volumetric displacem. Vi	Flow q_{Ve} [GPM] & n = 1800 RPM			Input power P [HP] & n = 1800 RPM		
			p = 0 PSI	p = 2000 PSI	p = 3500 PSI	p = 100 PSI	p = 2000 PSI	p = 3500 PSI
P1 & P2	042	8.07 in^3/rev	62.92	60.37	58.52	8.09	78.44	133.80
	045	8.70 in^3/rev	67.72	65.17	63.32	8.37	84.04	143.60
	050	9.67 in^3/rev	75.38	72.83	70.98	8.82	92.97	159.24
	052	10.00 in^3/rev	78.37	75.82	73.97	8.99	96.47	165.36
	054	10.43 in^3/rev	81.27	78.72	76.87	9.17	99.75	177.46
	057	11.18 in^3/rev	87.12	84.57	82.72	9.51	106.57	189.84
	062	12.00 in^3/rev	93.54	90.99	89.14	9.88	114.17	196.34
	066	13.00 in^3/rev	101.44	98.89	97.04	10.34	123.38	212.46
	072	13.86 in^3/rev	108.00	105.45	103.60	10.72	131.04	225.86
	085	16.40 in^3/rev	127.79	126.13 1)	-	11.88	101.66 1)	-

1) 085 = 1300 PSI max. int.

Back To The Table Of Content

Model No. **T67DBB - B38 - B14 - B08 - 1 R 00 - B 1 - M1 - ..**

T67DBB series - SAE C 2 bolts
Mounting flange J744

P1 P2 P3

Displacement for "P1"
Volumetric displacement (in^3/rev)

B14 = 2.68	B31 = 6.05
B17 = 3.36	B35 = 6.92
B20 = 4.03	B38 = 7.36
B22 = 4.29	B42 = 8.39
B24 = 4.95	045 = 8.89
B28 = 5.49	050 = 9.64

Displacement for "P2" & P3"
Volumetric displacement (in^3/rev.)

B02 = .35	B09 = 1.71
B03 = .60	B10 = 1.94
B04 = .78	B11 = 2.13
B05 = .97	B12 = 2.50
B06 = 1.21	B14 = 2.75
B07 = 1.37	B15 = 3.05
B08 = 1.52	

Type of shaft
1 = keyed (non SAE)
2 = keyed (SAE CC)
3 = splined 12/24 (SAE C)
4 = splined 12/24 (SAE CC)

Modifications

Mounting w/connection variables
P1 = 1"1/4 - P2 = 1" - P3 = 3/4" - S = 4"
01 = 4 bolts SAE flange
J518 - UNC thread
M1 = 4 bolts SAE flange
J518 - Metric thread

Seal class
1 = S1 (for mineral oil)
4 = S4 (for the resistant fluid)
5 = S5 (for mineral oil and fire resistant fluids)

Design letter

Porting combination (see page 62 - 63)
00 = standard

Direction of rotation (view on shaft end)
R = Clockwise
L = Counter-clockwise

OPERATING CHARACTERISTICS – TYPICAL [115 SUS]

Pressure port	Series	Volumetric displacem. Vi	Flow q_{Ve} [GPM] & n = 1800 RPM			Input power P [HP] & n = 1800 RPM		
			p = 0 PSI	p = 2000 PSI	p = 3630 PSI	p = 100 PSI	p = 2000 PSI	p = 3630 PSI
P1	B14	2.68 in^3/rev	20.92	19.18	17.81	3.46	27.77	47.03
	B17	3.36 in^3/rev	26.16	24.41	23.04	3.77	33.88	57.71
	B20	4.03 in^3/rev	31.39	29.64	28.27	4.07	39.98	68.39
	B22	4.29 in^3/rev	33.43	31.69	30.32	4.19	42.37	72.57
	B24	4.95 in^3/rev	38.57	36.82	35.45	4.49	48.36	83.06
	B28	5.49 in^3/rev	42.80	41.06	39.69	4.74	53.30	91.70
	B31	6.05 in^3/rev	47.18	45.43	44.06	4.99	58.41	100.63
	B35	6.92 in^3/rev	53.93	52.18	50.81	5.39	66.29	114.42
	B38	7.36 in^3/rev	57.35	55.61	54.24	5.59	70.28	121.42
	B42	8.39 in^3/rev	65.39	63.65	62.28	6.05	79.66	137.83
	045	8.89 in^3/rev	69.29	67.11	65.31	6.74	83.75	145.79
	050	9.64 in^3/rev	75.14	72.96	71.78 1)	7.08	90.58	134.50 1)
			p = 0 PSI	**p = 2000 PSI**	**p = 4350 PSI**	**p = 100 PSI**	**p = 2000 PSI**	**p = 4350 PSI**
P2 & P3	B02	.35 in^3/rev	2.76	2.33	1.80	0.74	4.02	8.10
	B03	.60 in^3/rev	4.66	4.23	3.70	0.85	6.24	12.93
	B04	.78 in^3/rev	6.09	5.66	5.13	0.94	7.90	16.55
	B05	.97 in^3/rev	7.56	7.13	6.60	1.02	9.62	20.29
	B06	1.21 in^3/rev	9.42	8.99	8.46	1.13	11.79	25.00
	B07	1.37 in^3/rev	10.70	10.27	9.74	1.20	13.29	28.26
	B08	1.52 in^3/rev	11.84	11.41	10.88	1.27	14.62	31.15
	B09	1.71 in^3/rev	13.31	12.87	12.35	1.36	16.35	34.92
	B10	1.94 in^3/rev	15.12	14.69	14.16	1.46	18.45	39.48
	B11	2.13 in^3/rev	16.64	16.19	15.68	1.55	20.17	43.22
	B12	2.50 in^3/rev	19.50	19.07	18.54	1.72	23.55	50.58
	B14	2.75 in^3/rev	21.40	20.95	20.44	1.83	25.80	55.48
	B15	3.05 in^3/rev	23.78	23.35	22.88 2)	1.97	28.55	57.35 2)

1) 050 = 3000 PSI max. int. 2) B15 = 4060 PSI max. int.

Back To The Table Of Content

INTERNAL LEAKAGE (TYPICAL)

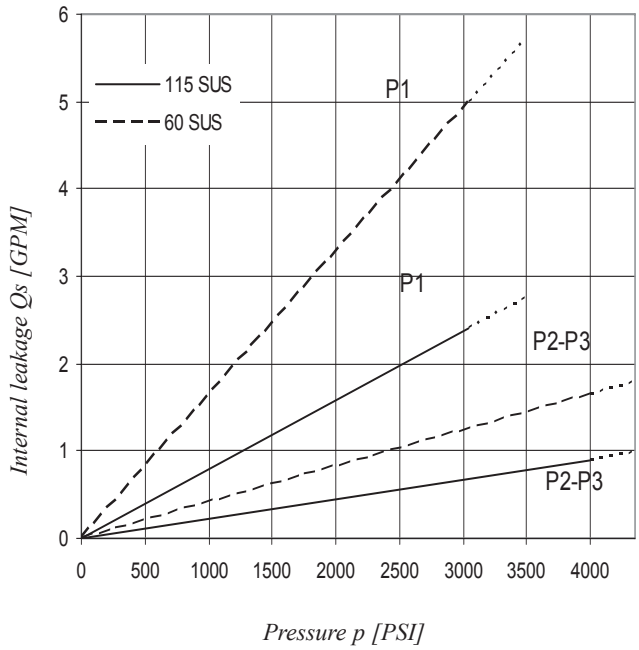

Do not operate pump more than 5 seconds at any speed or viscosity if internal leakage is higher than 50% of theoretical flow. Total leakage is the sum of each section loss at its operating conditions.

NOISE LEVEL (TYPICAL)
T67DBB - B38 - B06 - B04

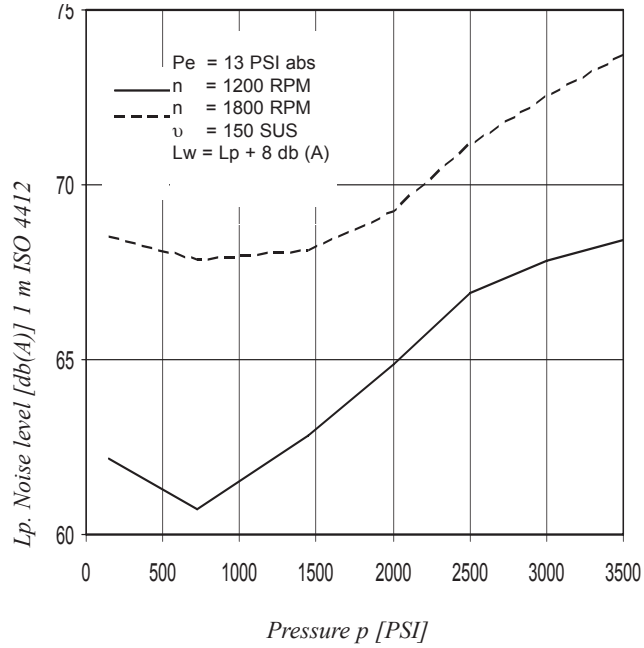

Triple pump noise level is given with each section discharging at the pressure noted on the curve.

HYDROMECHANICAL POWER LOSS (TYPICAL)

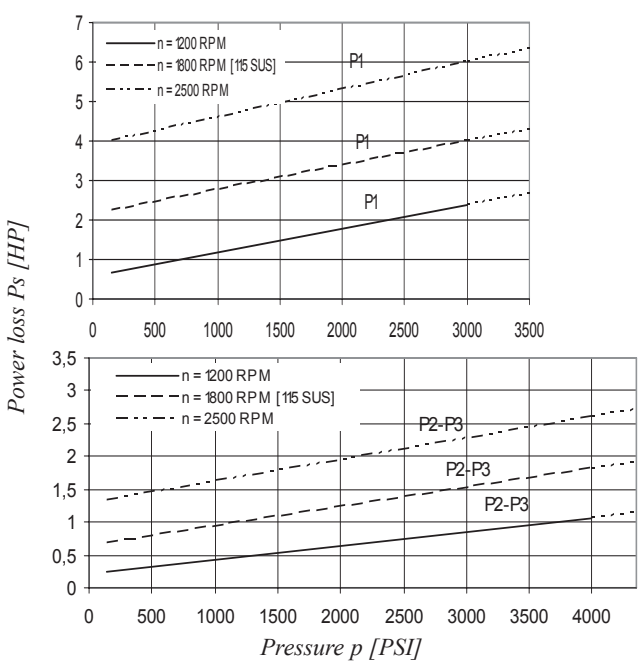

Total hydromechanical power loss is the sum of each section at its operating conditions.

PERMISSIBLE RADIAL LOAD

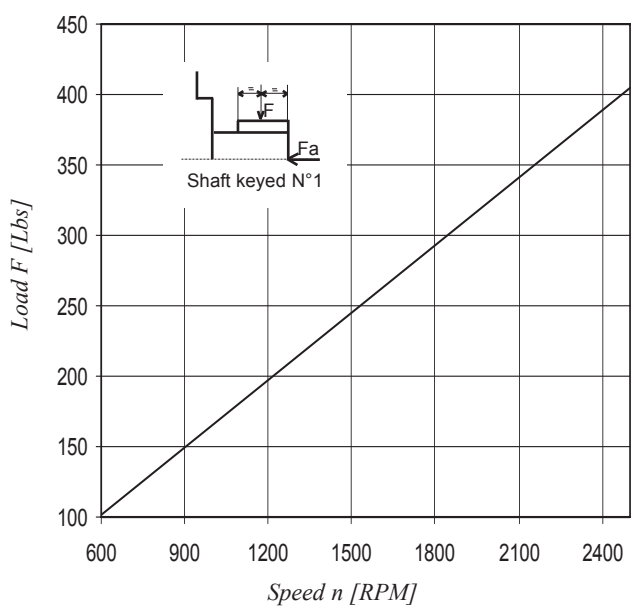

Maximum permissible axial load Fa = 270 Lbs

Back To The Table Of Content

Model No. **T67DCB - B38 - 028 - B08 - 1 R 00 - B 1 - M1 - ..**

T67DCB series - SAE C 2 bolts Mounting flange J744

P1 P2 P3

Displacement for "P1"
Volumetric displacement (in^3/rev)

B14 = 2.68	B31 = 6.05
B17 = 3.36	B35 = 6.92
B20 = 4.03	B38 = 7.36
B22 = 4.29	B42 = 8.39
B24 = 4.95	045 = 8.89
B28 = 5.49	050 = 9.64

Displacement for "P2"
Volumetric displacement (in^3/rev)

003 = .66	017 = 3.56
005 = 1.05	020 = 3.89
006 = 1.30	022 = 4.29
008 = 1.61	025 = 4.84
010 = 2.08	028 = 5.42
012 = 2.26	031 = 6.10
014 = 2.81	

Displacement for "P3"
Volumetric displacement (in^3/rev)

B02 = .35	B07 = 1.37	B12 = 2.50
B03 = .60	B08 = 1.52	B14 = 2.75
B04 = .78	B09 = 1.71	B15 = 3.05
B05 = .97	B10 = 1.94	
B06 = 1.21	B11 = 2.13	

Modifications

Mounting w/connection variables
P1 = 1"1/4 - P2 = 1" - P3 = 3/4" - S = 4"
01 = 4 bolts SAE flange
J518 - UNC thread
M1 = 4 bolts SAE flange
J518 - Metric thread

Seal class
1 = S1 (for mineral oil)
4 = S4 (for the resistant fluid)
5 = S5 (for mineral oil and fire resistant fluids)

Design letter

Porting combination (see page 62 - 63)
00 = standard

Direction of rotation (view on shaft end)
R = Clockwise
L = Counter-clockwise

Type of shaft
1 = keyed (non SAE)
2 = keyed (SAE CC)
3 = splined 12/24 (SAE C)
4 = splined 12/24 (SAE CC)

OPERATING CHARACTERISTICS – TYPICAL [115 SUS]

Pressure port	Series	Volumetric displacem. Vi	Flow q_{Ve} [GPM] & n = 1800 RPM			Input power P [HP] & n = 1800 RPM		
			p = 0 PSI	p = 2000 PSI	p = 3630 PSI	p = 100 PSI	p = 2000 PSI	p = 3630 PSI
P1	B14	2.68 in^3/rev	20.92	19.18	17.81	3.46	27.77	47.03
	B17	3.36 in^3/rev	26.16	24.41	23.04	3.77	33.88	57.71
	B20	4.03 in^3/rev	31.39	29.64	28.27	4.07	39.98	68.39
	B22	4.29 in^3/rev	33.43	31.69	30.32	4.19	42.37	72.57
	B24	4.95 in^3/rev	38.57	36.82	35.45	4.49	48.36	83.06
	B28	5.49 in^3/rev	42.80	41.06	39.69	4.74	53.30	91.70
	B31	6.05 in^3/rev	47.18	45.43	44.06	4.99	58.41	100.63
	B35	6.92 in^3/rev	53.93	52.18	50.81	5.39	66.29	114.42
	B38	7.36 in^3/rev	57.35	55.61	54.24	5.59	70.28	121.42
	B42	8.39 in^3/rev	65.39	63.65	62.28	6.05	79.66	137.83
	045	8.89 in^3/rev	69.29	67.11	65.31	6.74	83.75	145.79
	050	9.64 in^3/rev	75.14	72.96	71.78 1)	7.08	90.58	134.50 1)
			p = 0 PSI	**p = 2000 PSI**	**p = 4000 PSI**	**p = 100 PSI**	**p = 2000 PSI**	**p = 4000 PSI**
P2	003	.66 in^3/rev	5.14	3.85	-	2.11	8.45	-
	005	1.05 in^3/rev	8.18	6.89	5.68	2.29	12.00	19.81
	006	1.30 in^3/rev	10.13	8.84	7.63	2.40	14.28	23.79
	008	1.61 in^3/rev	12.55	11.26	10.05	2.54	17.11	28.75
	010	2.08 in^3/rev	16.22	14.93	13.71	2.76	21.38	36.22
	012	2.26 in^3/rev	17.64	16.35	15.14	2.84	23.05	39.14
	014	2.81 in^3/rev	21.88	20.59	19.37	3.09	27.99	47.78
	017	3.56 in^3/rev	27.73	26.44	25.22	3.43	34.81	59.73
	020	3.89 in^3/rev	30.34	29.05	27.84	3.58	37.86	65.07
	022	4.29 in^3/rev	33.43	32.14	30.93	3.76	41.47	71.38
	025	4.84 in^3/rev	37.71	36.42	35.21	4.01	46.46	80.12
	028	5.42 in^3/rev	42.23	40.94	40.32 1)	4.27	51.74	76.73 1)
	031	6.10 in^3/rev	47.56	46.27	45.65 1)	4.58	57.95	86.06 1)
			p = 0 PSI	**p = 2000 PSI**	**p = 4350 PSI**	**p = 100 PSI**	**p = 2000 PSI**	**p = 4350 PSI**
P3	B02	.35 in^3/rev	2.76	2.33	1.80	0.74	4.02	8.10
	B03	.60 in^3/rev	4.66	4.23	3.70	0.85	6.24	12.93
	B04	.78 in^3/rev	6.09	5.66	5.13	0.94	7.90	16.55
	B05	.97 in^3/rev	7.56	7.13	6.60	1.02	9.62	20.29
	B06	1.21 in^3/rev	9.42	8.99	8.46	1.13	11.79	25.00
	B07	1.37 in^3/rev	10.70	10.27	9.74	1.20	13.29	28.26
	B08	1.52 in^3/rev	11.84	11.41	10.88	1.27	14.62	31.15
	B09	1.71 in^3/rev	13.31	12.87	12.35	1.36	16.35	34.92
	B10	1.94 in^3/rev	15.12	14.69	14.16	1.46	18.45	39.48
	B11	2.13 in^3/rev	16.64	16.19	15.68	1.55	20.17	43.22
	B12	2.50 in^3/rev	19.50	19.07	18.54	1.72	23.55	50.58
	B14	2.75 in^3/rev	21.40	20.95	20.44	1.83	25.80	55.48
	B15	3.05 in^3/rev	23.78	23.35	22.88 2)	1.97	28.55	57.35 2)

- We do not recommand to use this 003 at 4000 PSI & 1500 RPM as the internal leakage is over 50% of theoretical flow.

1) 028 - 031 - 050 = 3000 PSI max. int. *2) B15 = 4060 PSI max. int.*

Back To The Table Of Content

INTERNAL LEAKAGE (TYPICAL)

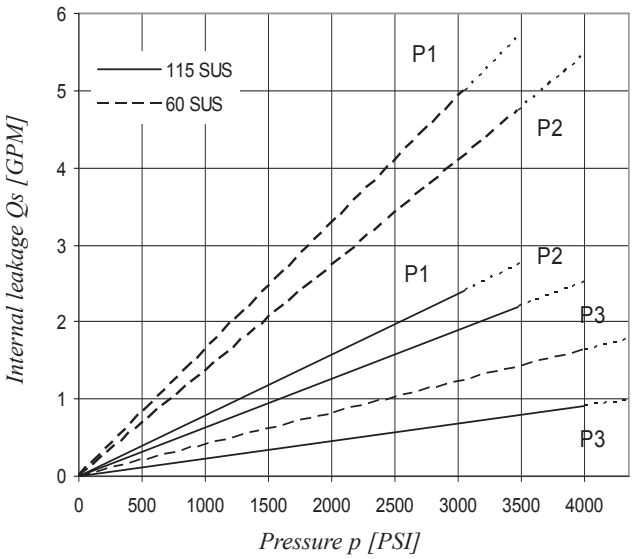

Do not operate pump more than 5 seconds at any speed or viscosity if internal leakage is higher than 50% of theoretical flow. Total leakage is the sum of each section loss at its operating conditions.

NOISE LEVEL (TYPICAL)
T67DCB - B38 - 022 - B10

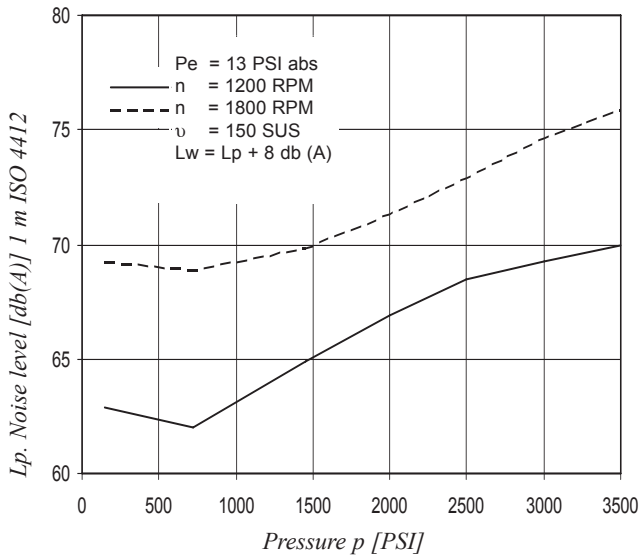

Triple pump noise level is given with each section discharging at the pressure noted on the curve.

HYDROMECHANICAL POWER LOSS (TYPICAL)

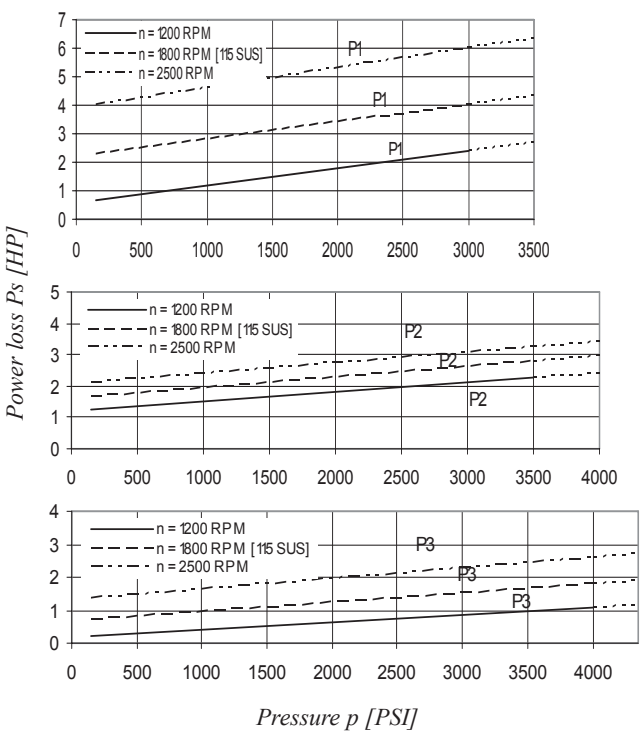

Total hydromechanical power loss is the sum of each section at its operating conditions.

PERMISSIBLE RADIAL LOAD

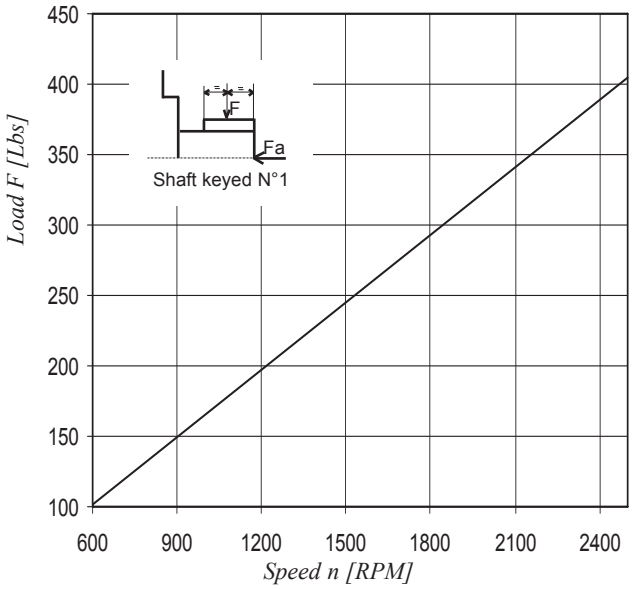

Maximum permissible axial load Fa = 180 Lbs

Back To The Table Of Content

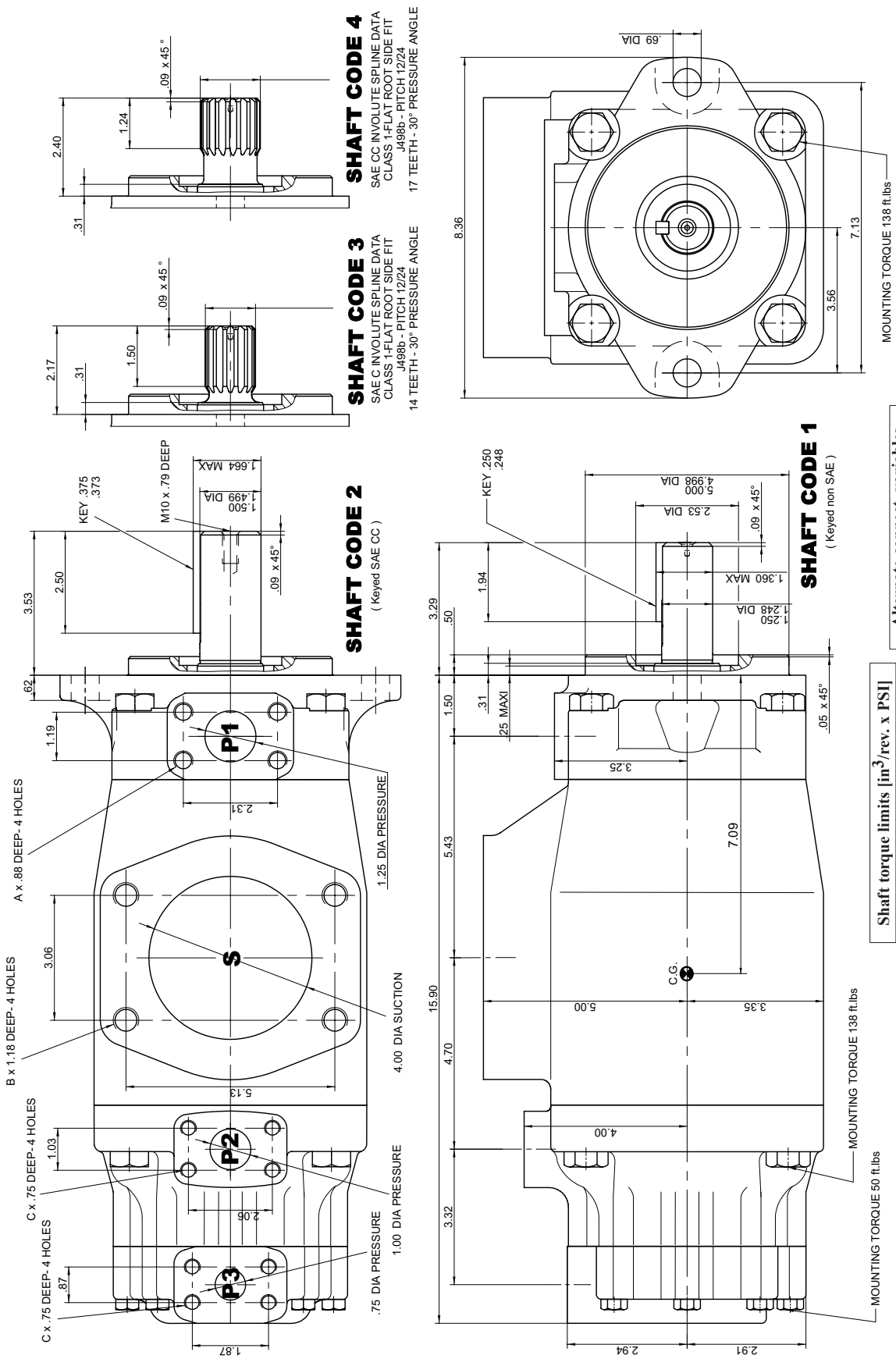

Alternate connect. variables		
	01	M1
A	7/16'' - 14 UNC	M12
B	5/8'' - 11 UNC	M16
C	3/8'' - 16 UNC	M10

Shaft torque limits [in^3/rev. x PSI]	
Shaft	Vi x p max. P1 + P2 + P3
1	38299
2	58902
3	54207
4	58902

Back To The Table Of Content

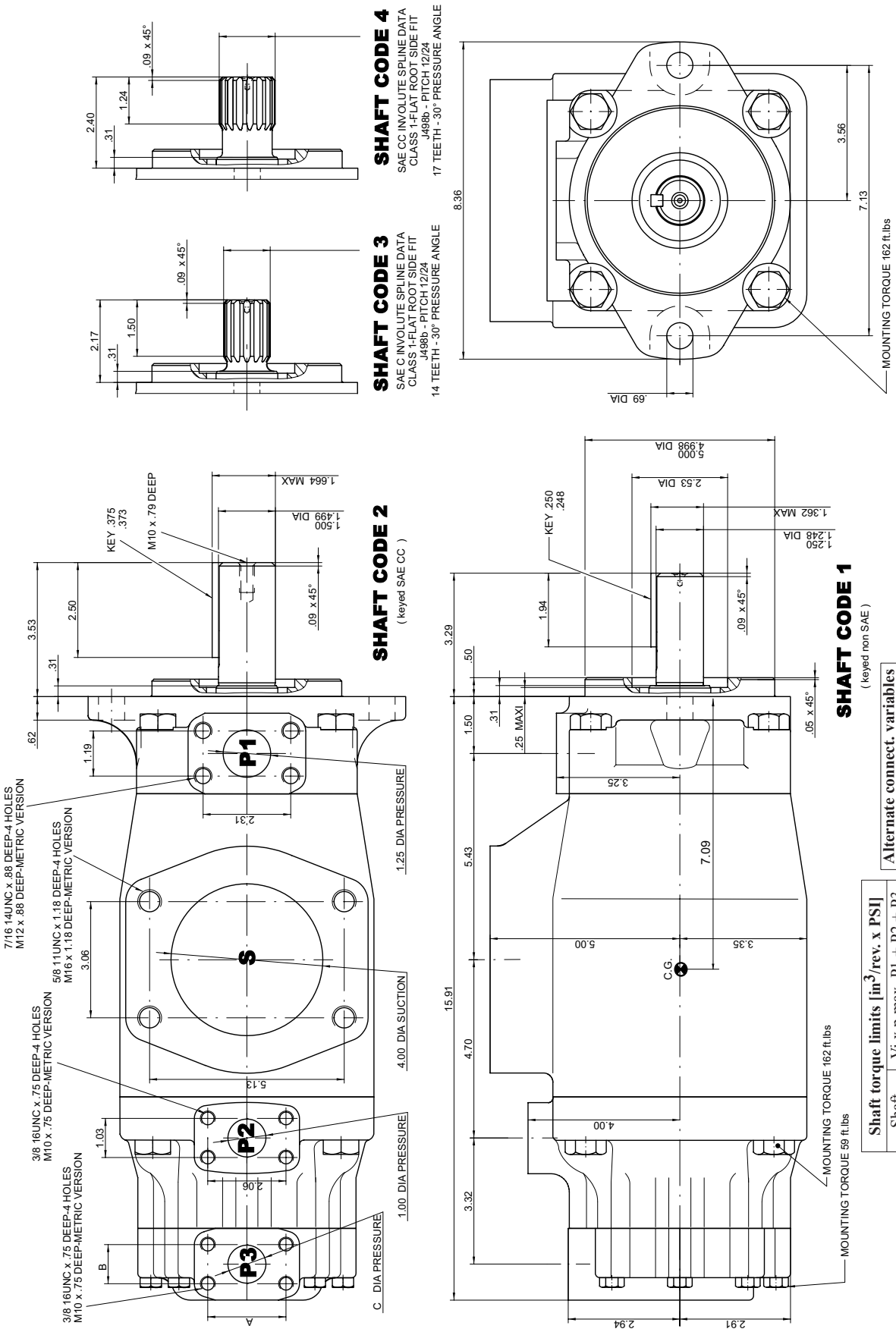

Shaft torque limits [in^3/rev. x PSI]	
Shaft	Vi x p max. P1 + P2 + P3
1	38299
2	58902
3	54207
4	58902

Alternate connect. variables		
	00 & M0	01 & M1
A	2.063	1.874
B	1.031	.874
C	1.000	.748

Back To The Table Of Content

Model No. **T67DCC - B38 - 028 - 010 - 1 R 00 - A 1 - M1 - ..**

T67DCC series - SAE C 2 bolts
Mounting flange J744

P1 P2 P3

Displacement for "P1"
Volumetric displacement (in^3/rev)

B14 = 2.68	B31 = 6.05
B17 = 3.36	B35 = 6.92
B20 = 4.03	B38 = 7.36
B22 = 4.29	B42 = 8.39
B24 = 4.95	045 = 8.89
B28 = 5.49	050 = 9.64

Displacement for "P2" & "P3"
Volumetric displacement (in^3/rev)

003 = .66	017 = 3.56
005 = 1.05	020 = 3.89
006 = 1.30	022 = 4.29
008 = 1.61	025 = 4.84
010 = 2.08	028 = 5.42
012 = 2.26	031 = 6.10
014 = 2.81	

Type of shaft
1 = keyed (non SAE)
2 = keyed (SAE CC)
3 = splined 12/24 (SAE C)
4 = splined 12/24 (SAE CC)

Modifications

Mounting w/connection variables
4 bolts SAE flange J518
P1 = 1"1/4 - P2 = 1" - S = 4"

	UNC	Metric
P3 = 1"	00	M0
P3 = 3/4"	01	M1

Seal class
1 = S1 (for mineral oil)
4 = S4 (for the resistant fluid)
5 = S5 (for mineral oil and fire resistant fluids)

Design letter

Porting combination (see page 62 - 63)
00 = standard

Direction of rotation (view on shaft end)
R = Clockwise
L = Counter-clockwise

OPERATING CHARACTERISTICS – TYPICAL [115 SUS]

Pressure port	Series	Volumetric displacem. Vi	Flow q_{Ve} [GPM] & n = 1800 RPM			Input power P [HP] & n = 1800 RPM		
			p = 0 PSI	p = 2000 PSI	p = 3630 PSI	p = 100 PSI	p = 2000 PSI	p = 3630 PSI
P1	B14	2.68 in^3/rev	20.92	19.18	17.81	3.46	27.77	47.03
	B17	3.36 in^3/rev	26.16	24.41	23.04	3.77	33.88	57.71
	B20	4.03 in^3/rev	31.39	29.64	28.27	4.07	39.98	68.39
	B22	4.29 in^3/rev	33.43	31.69	30.32	4.19	42.37	72.57
	B24	4.95 in^3/rev	38.57	36.82	35.45	4.49	48.36	83.06
	B28	5.49 in^3/rev	42.80	41.06	39.69	4.74	53.30	91.70
	B31	6.05 in^3/rev	47.18	45.43	44.06	4.99	58.41	100.63
	B35	6.92 in^3/rev	53.93	52.18	50.81	5.39	66.29	114.42
	B38	7.36 in^3/rev	57.35	55.61	54.24	5.59	70.28	121.42
	B42	8.39 in^3/rev	65.39	63.65	62.28	6.05	79.66	137.83
	045	8.89 in^3/rev	69.29	67.11	65.31	6.74	83.75	145.79
	050	9.64 in^3/rev	75.14	72.96	71.78 1)	7.08	90.58	134.50 1)
			p = 0 PSI	p = 2000 PSI	p = 4000 PSI	p = 100 PSI	p = 2000 PSI	p = 4000 PSI
P2 & P3	003	.66 in^3/rev	5.14	3.85	-	2.11	8.45	-
	005	1.05 in^3/rev	8.18	6.89	5.68	2.29	12.00	19.81
	006	1.30 in^3/rev	10.13	8.84	7.63	2.40	14.28	23.79
	008	1.61 in^3/rev	12.55	11.26	10.05	2.54	17.11	28.75
	010	2.08 in^3/rev	16.22	14.93	13.71	2.76	21.38	36.22
	012	2.26 in^3/rev	17.64	16.35	15.14	2.84	23.05	39.14
	014	2.81 in^3/rev	21.88	20.59	19.37	3.09	27.99	47.78
	017	3.56 in^3/rev	27.73	26.44	25.22	3.43	34.81	59.73
	020	3.89 in^3/rev	30.34	29.05	27.84	3.58	37.86	65.07
	022	4.29 in^3/rev	33.43	32.14	30.93	3.76	41.47	71.38
	025	4.84 in^3/rev	37.71	36.42	35.21	4.01	46.46	80.12
	028	5.42 in^3/rev	42.23	40.94	40.32 1)	4.27	51.74	76.73 1)
	031	6.10 in^3/rev	47.56	46.27	45.65 1)	4.58	57.95	86.06 1)

- We do not recommand to use this 003 at 4000 PSI & 1500 RPM as the internal leakage is over 50% of theoretical flow.

1) *050 – 028 – 031 = 3000 PSI max. int.*

Back To The Table Of Content

INTERNAL LEAKAGE (TYPICAL)

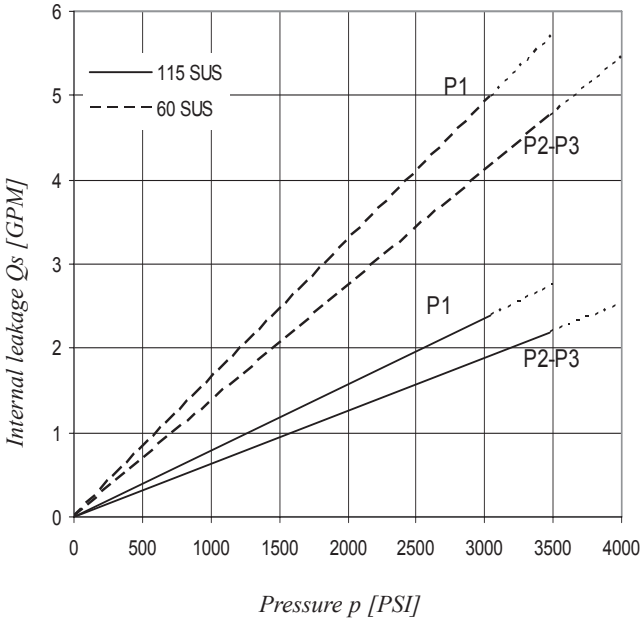

Do not operate pump more than 5 seconds at any speed or viscosity if internal leakage is higher than 50% of theoretical flow. Total leakage is the sum of each section loss at its operating conditions.

NOISE LEVEL (TYPICAL)
T67DCC - B31 - 022 - 022

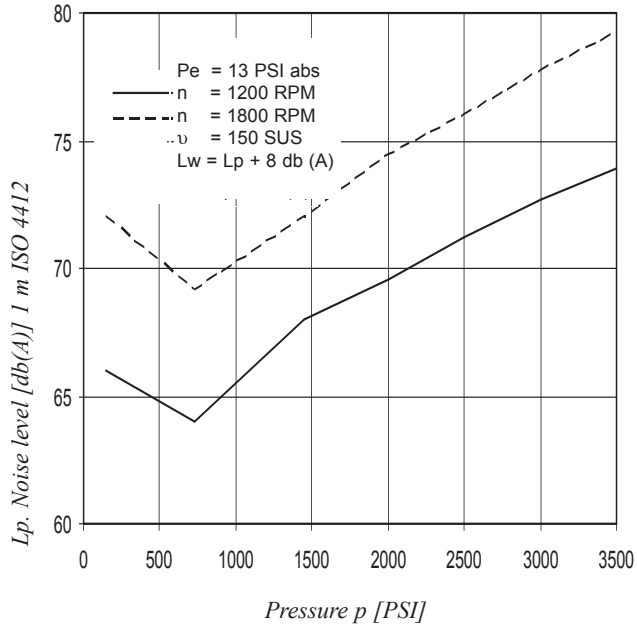

Triple pump noise level is given with each section discharging at the pressure noted on the curve.

HYDROMECHANICAL POWER LOSS (TYPICAL)

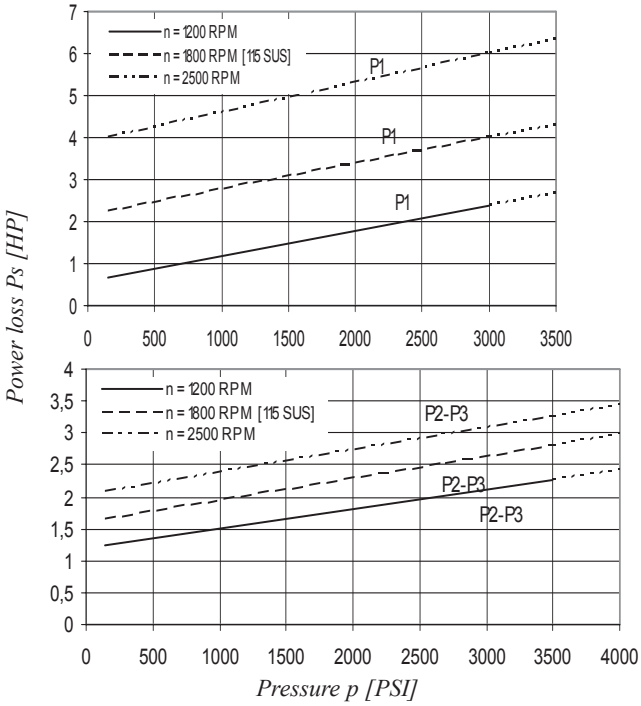

Total hydromechanical power loss is the sum of each section at its operating conditions.

PERMISSIBLE RADIAL LOAD

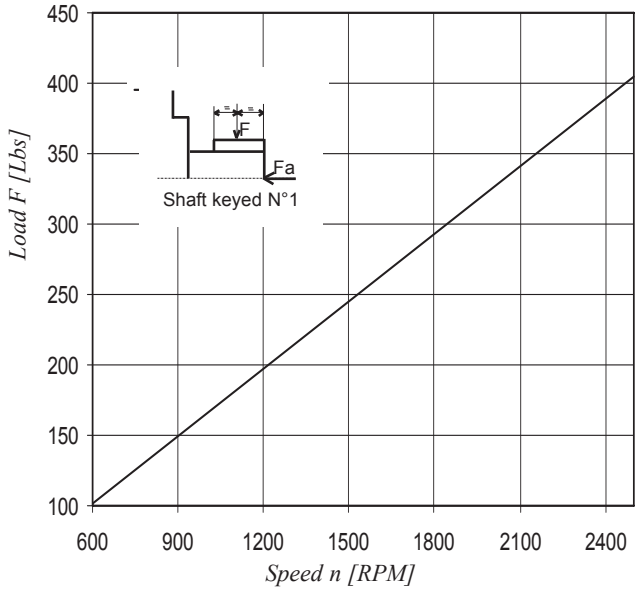

Maximum permissible axial load Fa = 270 Lbs

Back To The Table Of Content

Model No. **T7DDB or T7DDBS - 050 - B22 - B12 - 1 R 00 - A 1 - M0 - ..**

T7DDB series - 125-B4 HW
ISO 4 bolts 3019-2 mounting flange
T7DDBS series - SAE C 6 bolts
Mounting flange J744

P1 P2 P3

Displacement for "P1" & "P2"
Volumetric displacement (in^3/rev.)

B14 = 2.68	B31 = 6.05
B17 = 3.36	B35 = 6.92
B20 = 4.03	B38 = 7.36
B22 = 4.29	B42 = 8.39
B24 = 4.95	045 = 8.89
B28 = 5.49	050 = 9.64

Displacement for "P3"
Volumetric displacement (in^3/rev.)

B02 = .35	B09 = 1.71
B03 = .60	B10 = 1.94
B04 = .78	B11 = 2.13
B05 = .97	B12 = 2.50
B06 = 1.21	B14 = 2.75
B07 = 1.37	B15 = 3.05
B08 = 1.52	

Type of shaft T7DDBS
1 = keyed (SAE C) 3 = splined 12/24 (SAE C)
2 = keyed (SAE CC) 4 = splined 12/24 (SAE CC)

Type of shaft T7DDB and T7DDBS
5 = keyed (ISO R775 - G38M)

Modifications

Mounting w/connection variables
4 bolts SAE flange J518c

P1 & P2 = 1"1/4 - S = 4"		
Type	UNC	Metric
T7DDB - P3 = 1"		M0
T7DDB - P3 = 3/4"		M1
T7DDBS - P3 = 1"	00	M0
T7DDBS - P3 = 3/4"	01	M1

Seal class
1 = S1 (for mineral oil)
4 = S4 (for the resistant fluid)
5 = S5 (for mineral oil and fire resistant fluids)

Design letter

Porting combination (see page 62 - 63)
00 = standard

Direction of rotation (view on shaft end)
R = Clockwise
L = Counter-clockwise

OPERATING CHARACTERISTICS – TYPICAL [115 SUS]

Pressure port	Series	Volumetric displacem. Vi	Flow q_{Ve} [GPM] & n = 1800 RPM			Input power P [HP] & n = 1800 RPM		
			p = 0 PSI	p = 2000 PSI	p = 3630 PSI	p = 100 PSI	p = 2000 PSI	p = 3630 PSI
P1 & P2	B14	2.68 in^3/rev	20.92	19.18	17.81	3.46	27.77	47.03
	B17	3.36 in^3/rev	26.16	24.41	23.04	3.77	33.88	57.71
	B20	4.03 in^3/rev	31.39	29.64	28.27	4.07	39.98	68.39
	B22	4.29 in^3/rev	33.43	31.69	30.32	4.19	42.37	72.57
	B24	4.95 in^3/rev	38.57	36.82	35.45	4.49	48.36	83.06
	B28	5.49 in^3/rev	42.80	41.06	39.69	4.74	53.30	91.70
	B31	6.05 in^3/rev	47.18	45.43	44.06	4.99	58.41	100.63
	B35	6.92 in^3/rev	53.93	52.18	50.81	5.39	66.29	114.42
	B38	7.36 in^3/rev	57.35	55.61	54.24	5.59	70.28	121.42
	B42	8.39 in^3/rev	65.39	63.65	62.28	6.05	79.66	137.83
	045	8.89 in^3/rev	69.29	67.11	65.31	6.74	83.75	145.79
	050	9.64 in^3/rev	75.14	72.96	71.78 1)	7.08	90.58	134.50 1)
			p = 0 PSI	p = 2000 PSI	p = 4350 PSI	p = 100 PSI	p = 2000 PSI	p = 4350 PSI
P3	B02	.35 in^3/rev	2.76	2.33	1.80	0.74	4.02	8.10
	B03	.60 in^3/rev	4.66	4.23	3.70	0.85	6.24	12.93
	B04	.78 in^3/rev	6.09	5.66	5.13	0.94	7.90	16.55
	B05	.97 in^3/rev	7.56	7.13	6.60	1.02	9.62	20.29
	B06	1.21 in^3/rev	9.42	8.99	8.46	1.13	11.79	25.00
	B07	1.37 in^3/rev	10.70	10.27	9.74	1.20	13.29	28.26
	B08	1.52 in^3/rev	11.84	11.41	10.88	1.27	14.62	31.15
	B09	1.71 in^3/rev	13.31	12.87	12.35	1.36	16.35	34.92
	B10	1.94 in^3/rev	15.12	14.69	14.16	1.46	18.45	39.48
	B11	2.13 in^3/rev	16.64	16.19	15.68	1.55	20.17	43.22
	B12	2.50 in^3/rev	19.50	19.07	18.54	1.72	23.55	50.58
	B14	2.75 in^3/rev	21.40	20.95	20.44	1.83	25.80	55.48
	B15	3.05 in^3/rev	23.78	23.35	22.88 2)	1.97	28.55	57.35 2)

1) 050 = 3000 PSI max. int. 2) B15 = 4060 PSI max. int.

Back To The Table Of Content

INTERNAL LEAKAGE (TYPICAL)

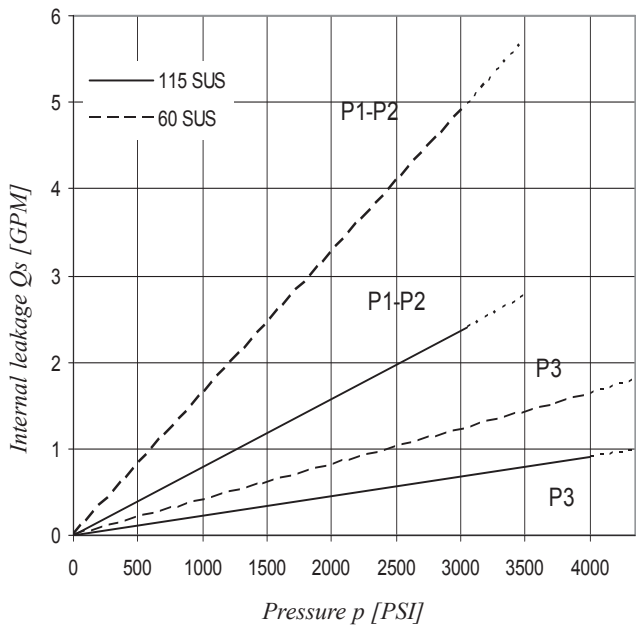

Do not operate pump more than 5 seconds at any speed or viscosity if internal leakage is higher than 50% of theoretical flow. Total leakage is the sum of each section loss at its operating conditions.

NOISE LEVEL (TYPICAL)
T7DDB - B31 - B31 - B10

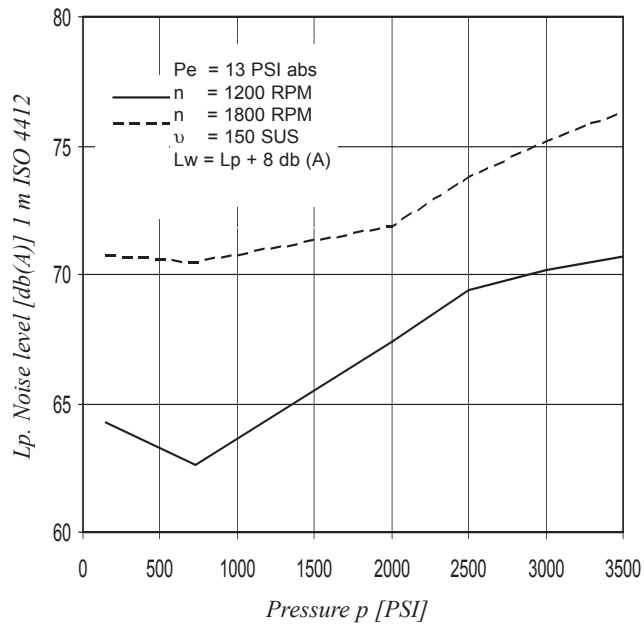

Triple pump noise level is given with each section discharging at the pressure noted on the curve.

HYDROMECHANICAL POWER LOSS (TYPICAL)

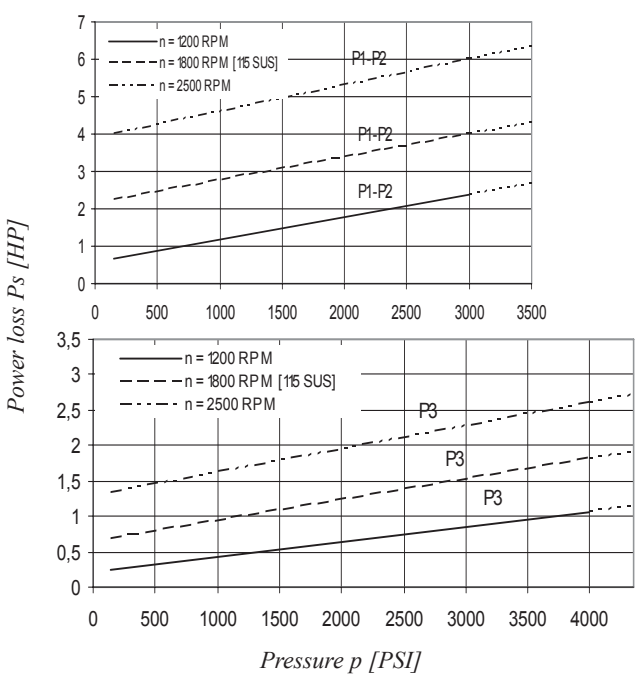

Total hydromechanical power loss is the sum of each section at its operating conditions.

PERMISSIBLE RADIAL LOAD

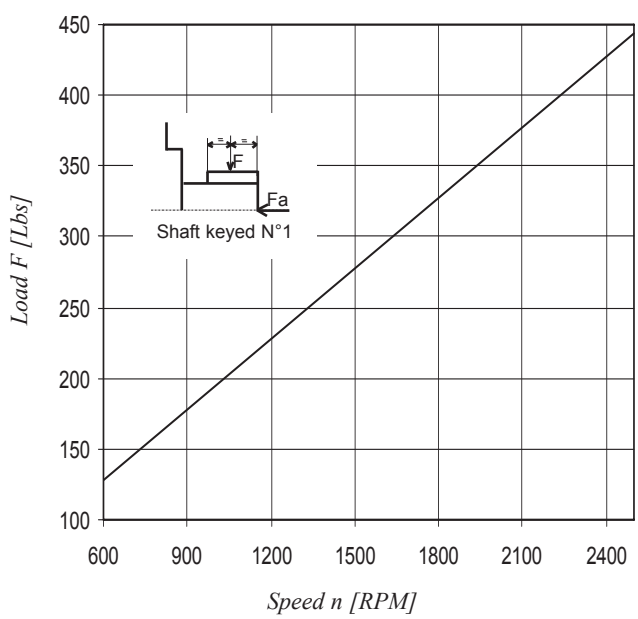

Maximum permissible axial load Fa = 270 Lbs

Back To The Table Of Content

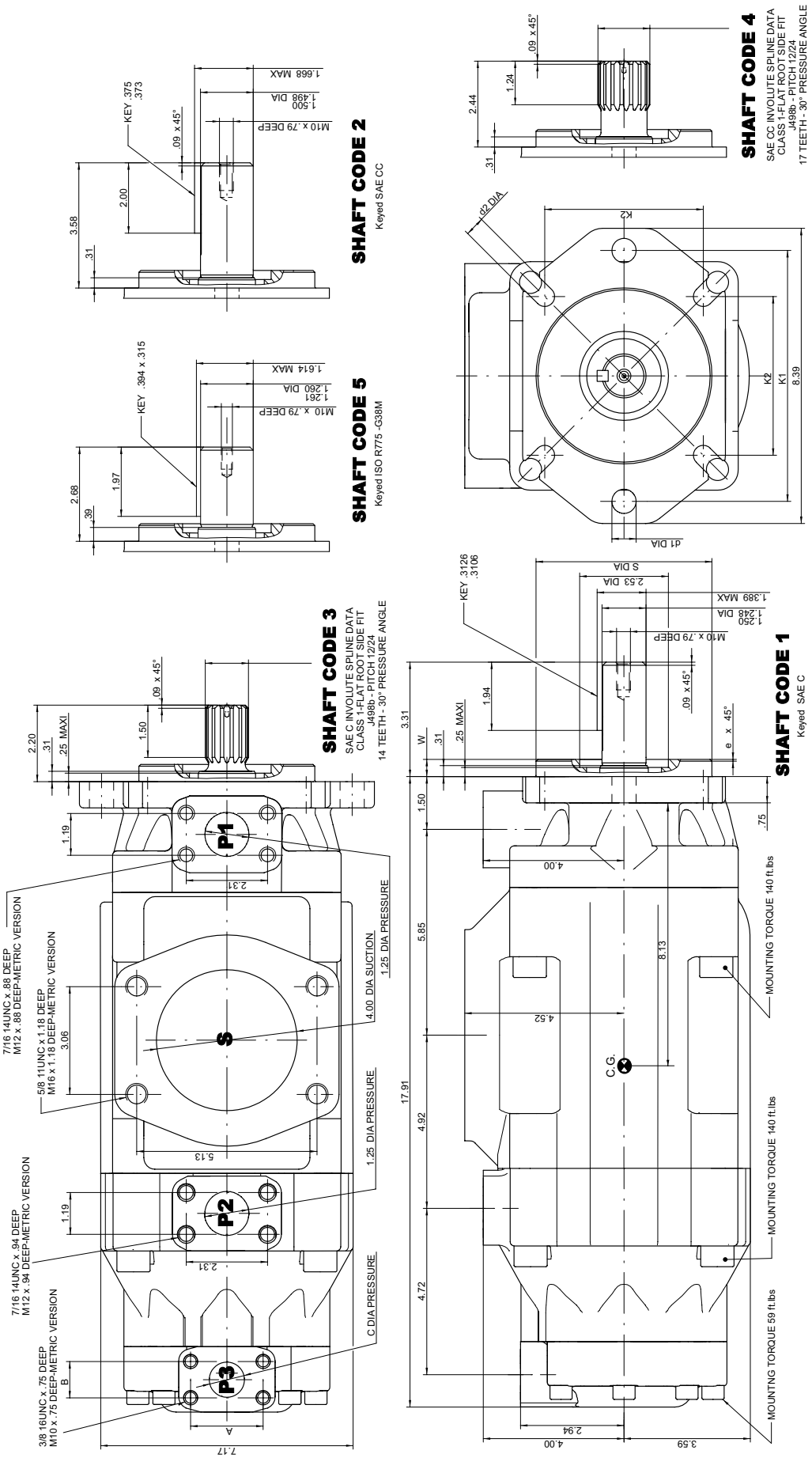

Alternate mounting flange

Series	S Dia		e x 45°	W	K1	d1 Dia	K2	d2 Dia
	Max.	Min.						
T7DDB	4.921	4.919	.079	.374	7.087	.709	4.454	.551
T7DDBS	5.000	4.998	.059	.500	7.126	.689	4.508	.563

Alternate connect. variables

	00 & M0	01 & M1
A	2.063	1.874
B	1.031	.874
C	1.000	.748

Shaft torque limits [in^3/rev. x PSI]

Shaft	Vi x p max. P1 + P2 + P3
1	38299
2	64044
3	54207
4	58902
5	47033

Back To The Table Of Content

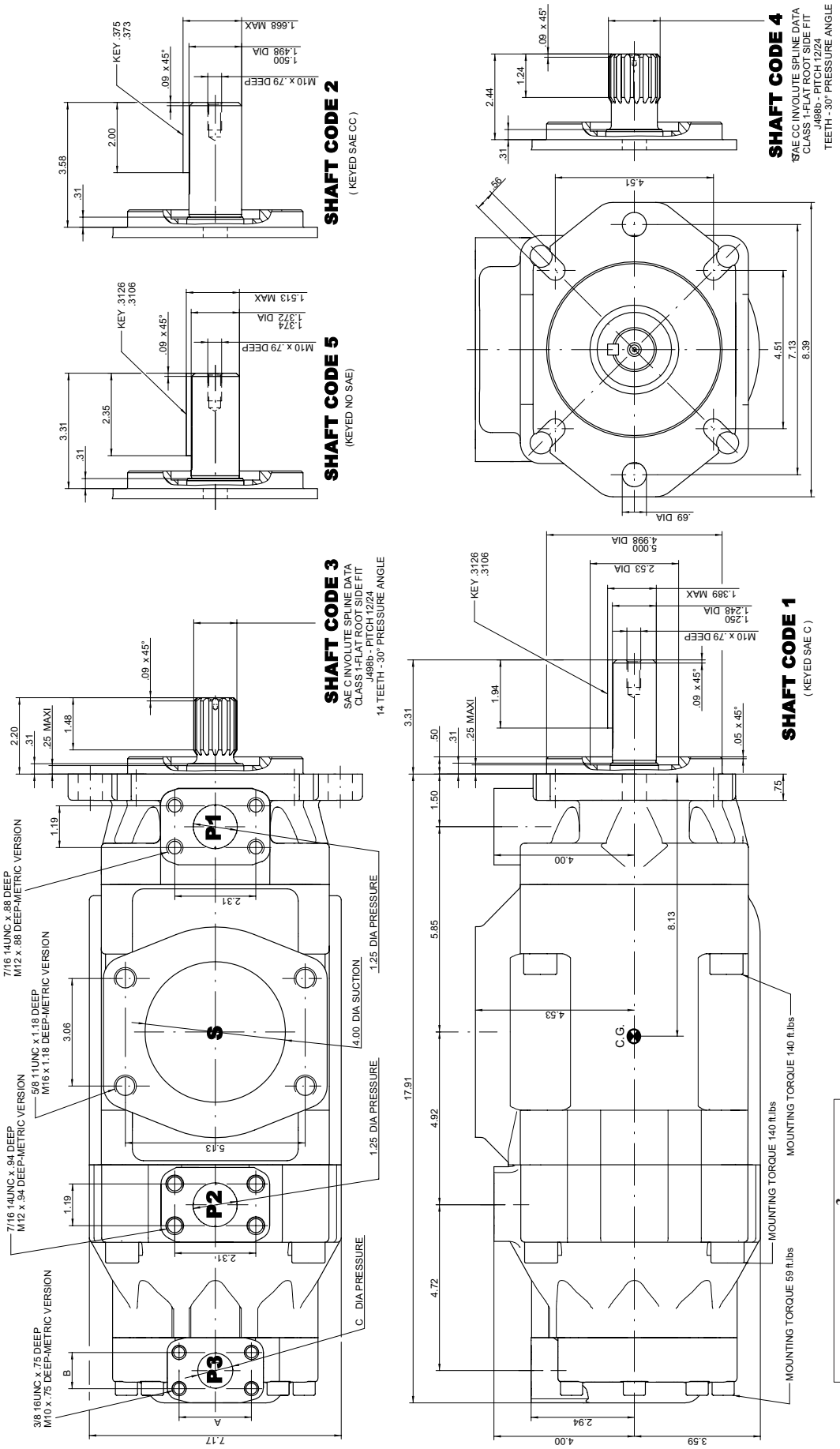

Alternate port				
Port	Code	A	B	C
P3	00 - M0	2.063	1.031	1.000
	01 - M1	1.874	.874	.748

Shaft torque limits [in^3/rev. x PSI]	
Shaft	Vi x p max. P1 + P2 + P3
1	38299
2	64044
3	54207
4	58902
5	49247

Back To The Table Of Content

Model No. **T67DDCS - 050 - B35 - B08 - 1 R 00 - A 1 M0 - ..**

Series - SAE C 6 bolts
Mounting flange J744

Displacement for "P1" & "P2"
Volumetric displacement (in^3/rev)

B14 = 2.68	B31 = 6.05
B17 = 3.36	B35 = 6.92
B20 = 4.03	B38 = 7.36
B22 = 4.29	B42 = 8.39
B24 = 4.95	045 = 8.89
B28 = 5.49	050 = 9.64

Displacement for "P3"
Volumetric displacement (in^3/rev)

003 = .66	017 = 3.56
005 = 1.05	020 = 3.89
006 = 1.30	022 = 4.29
008 = 1.61	025 = 4.84
010 = 2.08	028 = 5.42
012 = 2.26	031 = 6.10
014 = 2.81	

Type of shaft

1 = keyed (SAE C)	4 = splined 12/24 (SAE CC)
2 = keyed (SAE CC)	5 = keyed (non SAE)
3 = splined 12/24 (SAE C)	

P1 P2 P3

Modifications

Mounting w/connection variables
4 bolts SAE flange J518

	P1 & P2 = 1"1/4 - S = 4"			
Type	UNC		Metric	
P3	1"	3/4"	1"	3/4"
Code	00	01	M0	M1

Seal class
1 = S1 (for mineral oil)
4 = S4 (for the resistant fluid)
5 = S5 (for mineral oil and fire resistant fluids)

Design letter

Porting combination (see page 62 - 63)
00 = standard

Direction of rotation (view on shaft end)
R = Clockwise
L = Counter-clockwise

OPERATING CHARACTERISTICS – TYPICAL [115 SUS]

Pressure port	Series	Volumetric displacem. Vi	Flow q_{Ve} [GPM] & n = 1800 RPM			Input power P [HP] & n = 1800 RPM		
			p = 0 PSI	p = 2000 PSI	p = 3630 PSI	p = 100 PSI	p = 2000 PSI	p = 3630 PSI
P1 & P2	B14	2.68 in^3/rev	20.92	19.18	17.81	3.46	27.77	47.03
	B17	3.36 in^3/rev	26.16	24.41	23.04	3.77	33.88	57.71
	B20	4.03 in^3/rev	31.39	29.64	28.27	4.07	39.98	68.39
	B22	4.29 in^3/rev	33.43	31.69	30.32	4.19	42.37	72.57
	B24	4.95 in^3/rev	38.57	36.82	35.45	4.49	48.36	83.06
	B28	5.49 in^3/rev	42.80	41.06	39.69	4.74	53.30	91.70
	B31	6.05 in^3/rev	47.18	45.43	44.06	4.99	58.41	100.63
	B35	6.92 in^3/rev	53.93	52.18	50.81	5.39	66.29	114.42
	B38	7.36 in^3/rev	57.35	55.61	54.24	5.59	70.28	121.42
	B42	8.39 in^3/rev	65.39	63.65	62.28	6.05	79.66	137.83
	045	8.89 in^3/rev	69.29	67.11	65.31	6.74	83.75	145.79
	050	9.64 in^3/rev	75.14	72.96	71.78 1)	7.08	90.58	134.50 1)
			p = 0 PSI	**p = 2000 PSI**	**p = 4000 PSI**	**p = 100 PSI**	**p = 2000 PSI**	**p = 4000 PSI**
P3	003	.66 in^3/rev	5.14	3.85	-	2.11	8.45	-
	005	1.05 in^3/rev	8.18	6.89	5.68	2.29	12.00	19.81
	006	1.30 in^3/rev	10.13	8.84	7.63	2.40	14.28	23.79
	008	1.61 in^3/rev	12.55	11.26	10.05	2.54	17.11	28.75
	010	2.08 in^3/rev	16.22	14.93	13.71	2.76	21.38	36.22
	012	2.26 in^3/rev	17.64	16.35	15.14	2.84	23.05	39.14
	014	2.81 in^3/rev	21.88	20.59	19.37	3.09	27.99	47.78
	017	3.56 in^3/rev	27.73	26.44	25.22	3.43	34.81	59.73
	020	3.89 in^3/rev	30.34	29.05	27.84	3.58	37.86	65.07
	022	4.29 in^3/rev	33.43	32.14	30.93	3.76	41.47	71.38
	025	4.84 in^3/rev	37.71	36.42	35.21	4.01	46.46	80.12
	028	5.42 in^3/rev	42.23	40.94	40.32 1)	4.27	51.74	76.73 1)
	031	6.10 in^3/rev	47.56	46.27	45.65 1)	4.58	57.95	86.06 1)

- We do not recommand to use this 003 at 4000 PSI & 1500 RPM as the internal leakage is over 50% of theoretical flow.
1) 050 – 028 – 031 = 3000 PSI max. int.

Back To The Table Of Content

INTERNAL LEAKAGE (TYPICAL)

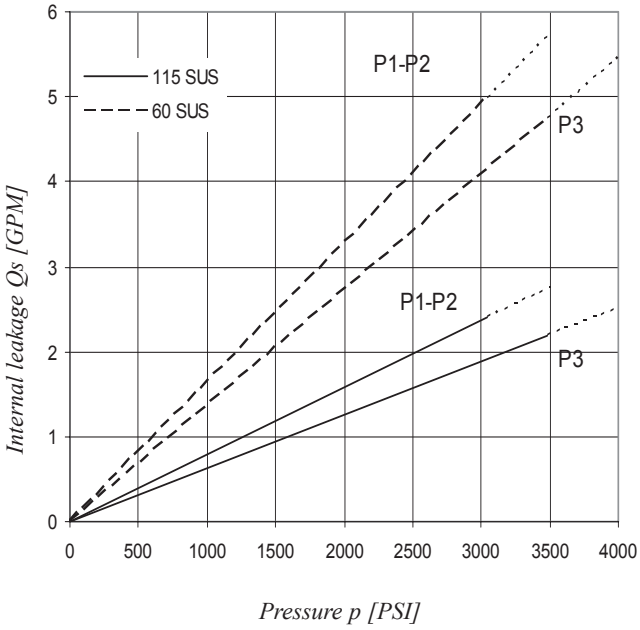

Do not operate pump more than 5 seconds at any speed or viscosity if internal leakage is higher than 50% of theoretical flow. Total leakage is the sum of each section loss at its operating conditions.

NOISE LEVEL (TYPICAL)
T67DDCS - B31 - B31 - 022

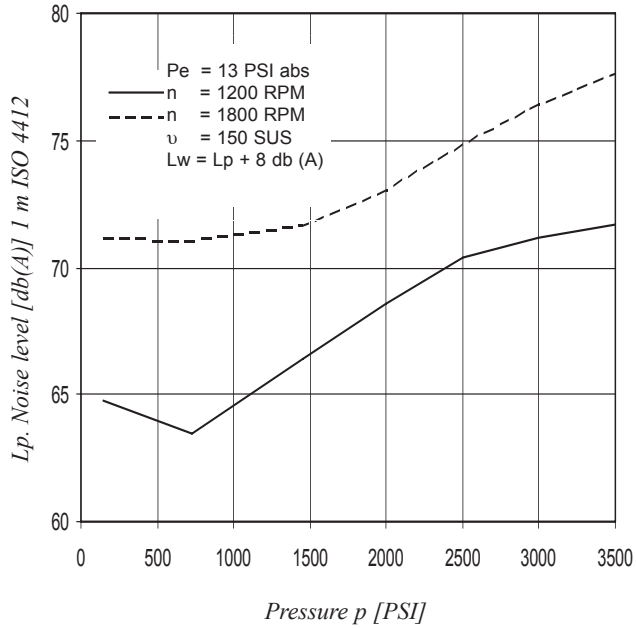

Triple pump noise level is given with each section discharging at the pressure noted on the curve.

HYDROMECHANICAL POWER LOSS (TYPICAL)

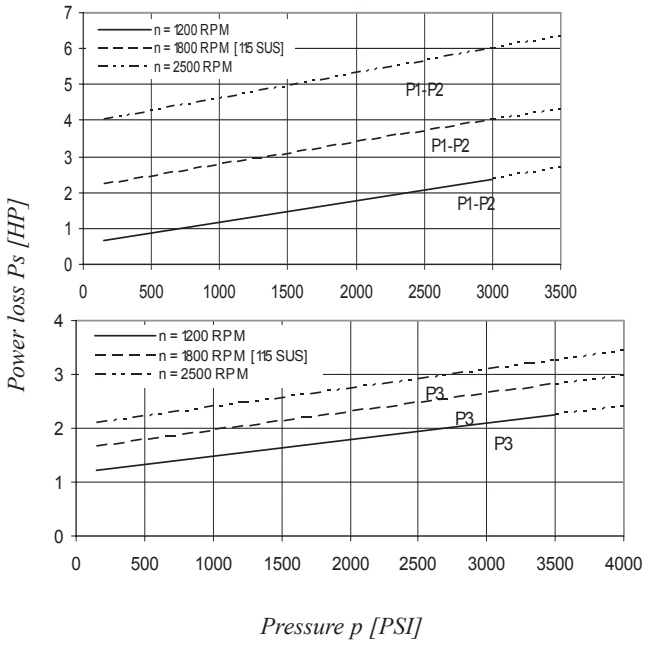

Total hydromechanical power loss is the sum of each section at its operating conditions.

PERMISSIBLE RADIAL LOAD

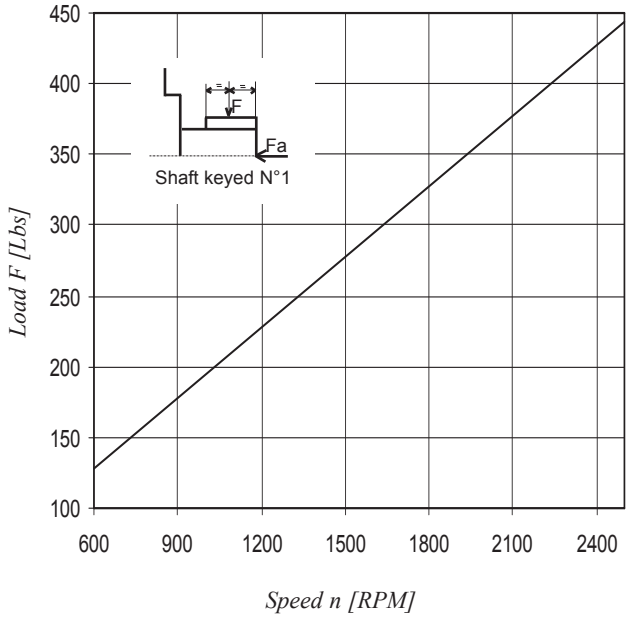

Maximum permissible axial load Fa = 270 Lbs

Back To The Table Of Content

Model No. **T7EDB or T7EDBS - 062 - B35 - B10 - 1 R 00 - A 1 - 01 - ..**

P1 P2 P3

T7EDB series - 250-B4 HW
ISO 4 bolts 3019-2 mounting flange
T7EDBS series - SAE E 4 bolts
Mounting flange J744

Displacement for "P1"
Volumetric displacement (in^3/rev)

042 = 8.07	057 = 11.18
045 = 8.70	062 = 12.00
050 = 9.67	066 = 13.00
052 = 10.00	072 = 13.86
054 = 10.43	085 = 16.40

Displacement for "P2"
Volumetric displacement (in^3/rev)

B14 = 2.68	B31 = 6.05
B17 = 3.36	B35 = 6.92
B20 = 4.03	B38 = 7.36
B22 = 4.29	B42 = 8.39
B24 = 4.95	045 = 8.89
B28 = 5.49	050 = 9.64

Displacement for "P3"
Volumetric displacement (in^3/rev.)

B02 = .35	B09 = 1.71
B03 = .60	B10 = 1.94
B04 = .78	B11 = 2.13
B05 = .97	B12 = 2.50
B06 = 1.21	B14 = 2.75
B07 = 1.37	B15 = 3.05
B08 = 1.52	

Modifications

Mounting w/connection variables
4 bolts SAE flanges J518

P1 = 1"1/2 - P2 = 1"1/4 - S = 4"		
Type	UNC	Metric
T7EDB - P3 = 1"		M0
T7EDB - P3 = 3/4"		M1
T7EDBS - P3 = 1"	00	M0
T7EDBS - P3 = 3/4"	01	M1

Seal class
1 = S1 (for mineral oil)
4 = S4 (for the resistant fluid)
5 = S5 (for mineral oil and fire resistant fluids)

Design letter

Porting combination (see page 62 - 63)
00 = standard

Direction of rotation (view on shaft end)
R = Clockwise
L = Counter-clockwise

Type of shaft T7EDB
1 = keyed (G45N - ISO 3019-2)

Type of shaft T7EDBS
2 = keyed (SAE D & E)
3 = splined 8/16 (SAE D & E)

OPERATING CHARACTERISTICS – TYPICAL [115 SUS]

Pressure port	Series	Volumetric displacem. Vi	Flow q_{Ve} [GPM] & n = 1800 RPM			Input power P [HP] & n = 1800 RPM		
			p = 0 PSI	p = 2000 PSI	p = 3500 PSI	p = 100 PSI	p = 2000 PSI	p = 3500 PSI
P1	042	8.07 in^3/rev	62.92	60.37	58.52	8.09	78.44	133.80
	045	8.70 in^3/rev	67.72	65.17	63.32	8.37	84.04	143.60
	050	9.67 in^3/rev	75.38	72.83	70.98	8.82	92.97	159.24
	052	10.00 in^3/rev	78.37	75.82	73.97	8.99	96.47	165.36
	054	10.43 in^3/rev	81.27	78.72	76.87	9.17	99.75	177.46
	057	11.18 in^3/rev	87.12	84.57	82.72	9.51	106.57	189.84
	062	12.00 in^3/rev	93.54	90.99	89.14	9.88	114.17	196.34
	066	13.00 in^3/rev	101.44	98.89	97.04	10.34	123.38	212.46
	072	13.86 in^3/rev	108.00	105.45	103.60	10.72	131.04	225.86
	085	16.40 in^3/rev	127.79	126.13 1)	-	11.88	101.66 1)	-
			p = 0 PSI	**p = 2000 PSI**	**p = 3630 PSI**	**p = 100 PSI**	**p = 2000 PSI**	**p = 3630 PSI**
P2	B14	2.68 in^3/rev	20.92	19.18	17.81	3.46	27.77	47.03
	B17	3.36 in^3/rev	26.16	24.41	23.04	3.77	33.88	57.71
	B20	4.03 in^3/rev	31.39	29.64	28.27	4.07	39.98	68.39
	B22	4.29 in^3/rev	33.43	31.69	30.32	4.19	42.37	72.57
	B24	4.95 in^3/rev	38.57	36.82	35.45	4.49	48.36	83.06
	B28	5.49 in^3/rev	42.80	41.06	39.69	4.74	53.30	91.70
	B31	6.05 in^3/rev	47.18	45.43	44.06	4.99	58.41	100.63
	B35	6.92 in^3/rev	53.93	52.18	50.81	5.39	66.29	114.42
	B38	7.36 in^3/rev	57.35	55.61	54.24	5.59	70.28	121.42
	B42	8.39 in^3/rev	65.39	63.65	62.28	6.05	79.66	137.83
	045	8.89 in^3/rev	69.29	67.11	65.31	6.74	83.75	145.79
	050	9.64 in^3/rev	75.14	72.96	71.78 2)	7.08	90.58	134.50 2)
			p = 0 PSI	**p = 2000 PSI**	**p = 4350 PSI**	**p = 100 PSI**	**p = 2000 PSI**	**p = 4350 PSI**
P3	B02	.35 in^3/rev	2.76	2.33	1.80	0.74	4.02	8.10
	B03	.60 in^3/rev	4.66	4.23	3.70	0.85	6.24	12.93
	B04	.78 in^3/rev	6.09	5.66	5.13	0.94	7.90	16.55
	B05	.97 in^3/rev	7.56	7.13	6.60	1.02	9.62	20.29
	B06	1.21 in^3/rev	9.42	8.99	8.46	1.13	11.79	25.00
	B07	1.37 in^3/rev	10.70	10.27	9.74	1.20	13.29	28.26
	B08	1.52 in^3/rev	11.84	11.41	10.88	1.27	14.62	31.15
	B09	1.71 in^3/rev	13.31	12.87	12.35	1.36	16.35	34.92
	B10	1.94 in^3/rev	15.12	14.69	14.16	1.46	18.45	39.48
	B11	2.13 in^3/rev	16.64	16.19	15.68	1.55	20.17	43.22
	B12	2.50 in^3/rev	19.50	19.07	18.54	1.72	23.55	50.58
	B14	2.75 in^3/rev	21.40	20.95	20.44	1.83	25.80	55.48
	B15	3.05 in^3/rev	23.78	23.35	22.88 3)	1.97	28.55	57.35 3)

1) 085 = 1300 PSI max. int. 2) 050 = 3000 PSI max. int. 3) B15 = 4060 PSI max. int.

Back To The Table Of Content

INTERNAL LEAKAGE (TYPICAL)

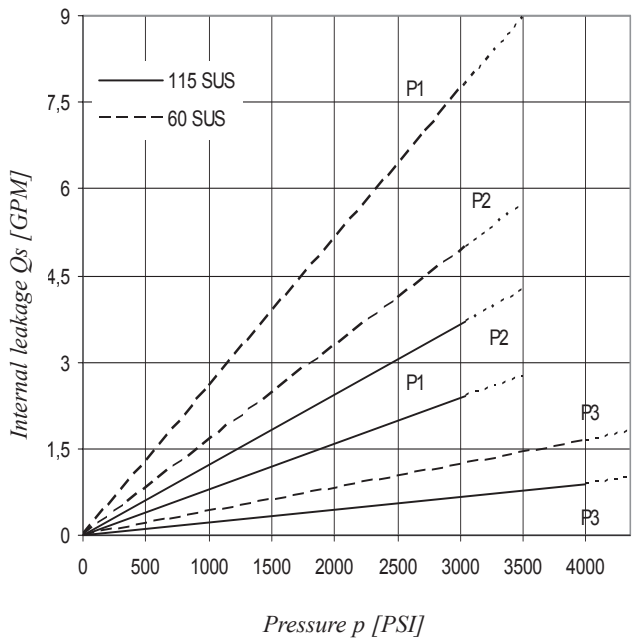

Do not operate pump more than 5 seconds at any speed or viscosity if internal leakage is higher than 50% of theoretical flow. Total leakage is the sum of each section loss at its operating conditions.

NOISE LEVEL (TYPICAL)
T7EDB - 062 - B35 - B04

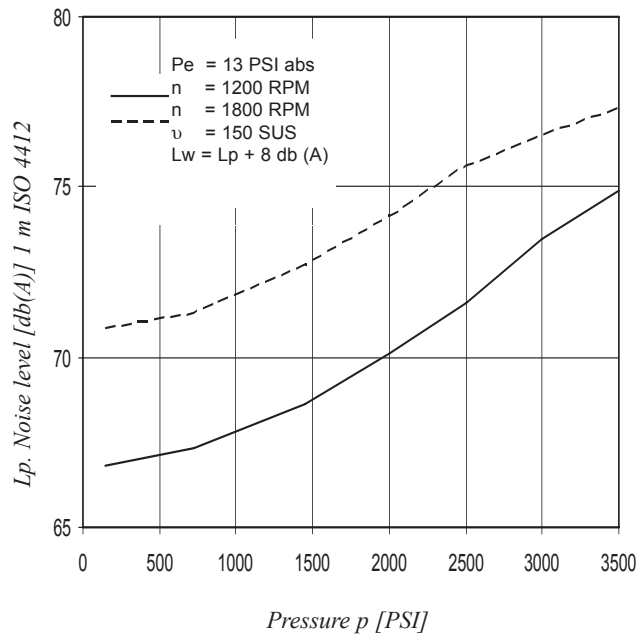

Triple pump noise level is given with each section discharging at the pressure noted on the curve.

HYDROMECHANICAL POWER LOSS (TYPICAL)

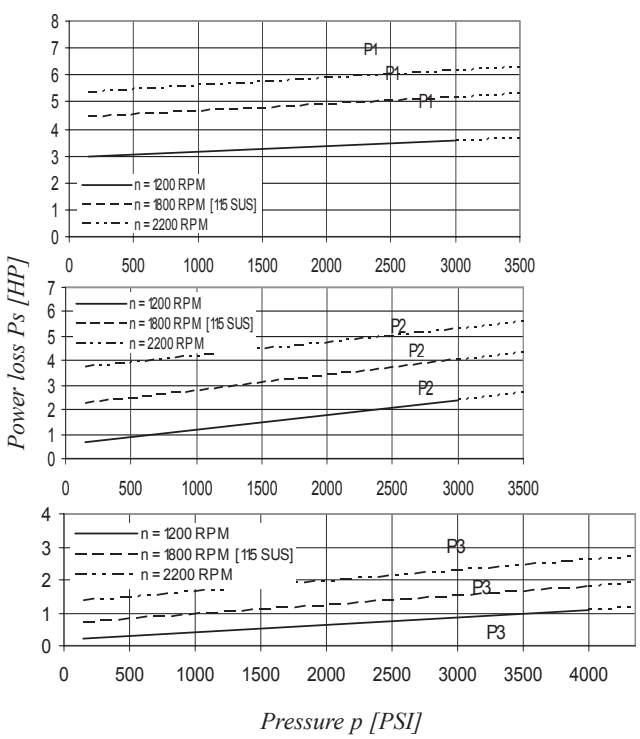

Total hydromechanical power loss is the sum of each section at its operating conditions.

PERMISSIBLE RADIAL LOAD

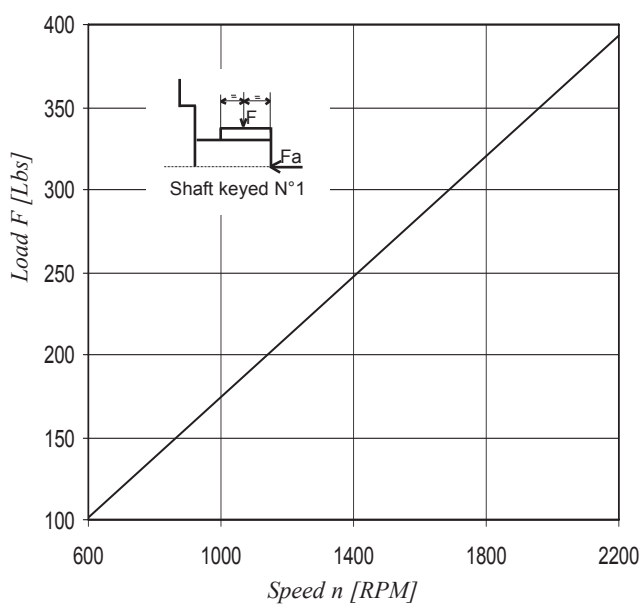

Maximum permissible axial load Fa = 449 Lbs

Back To The Table Of Content

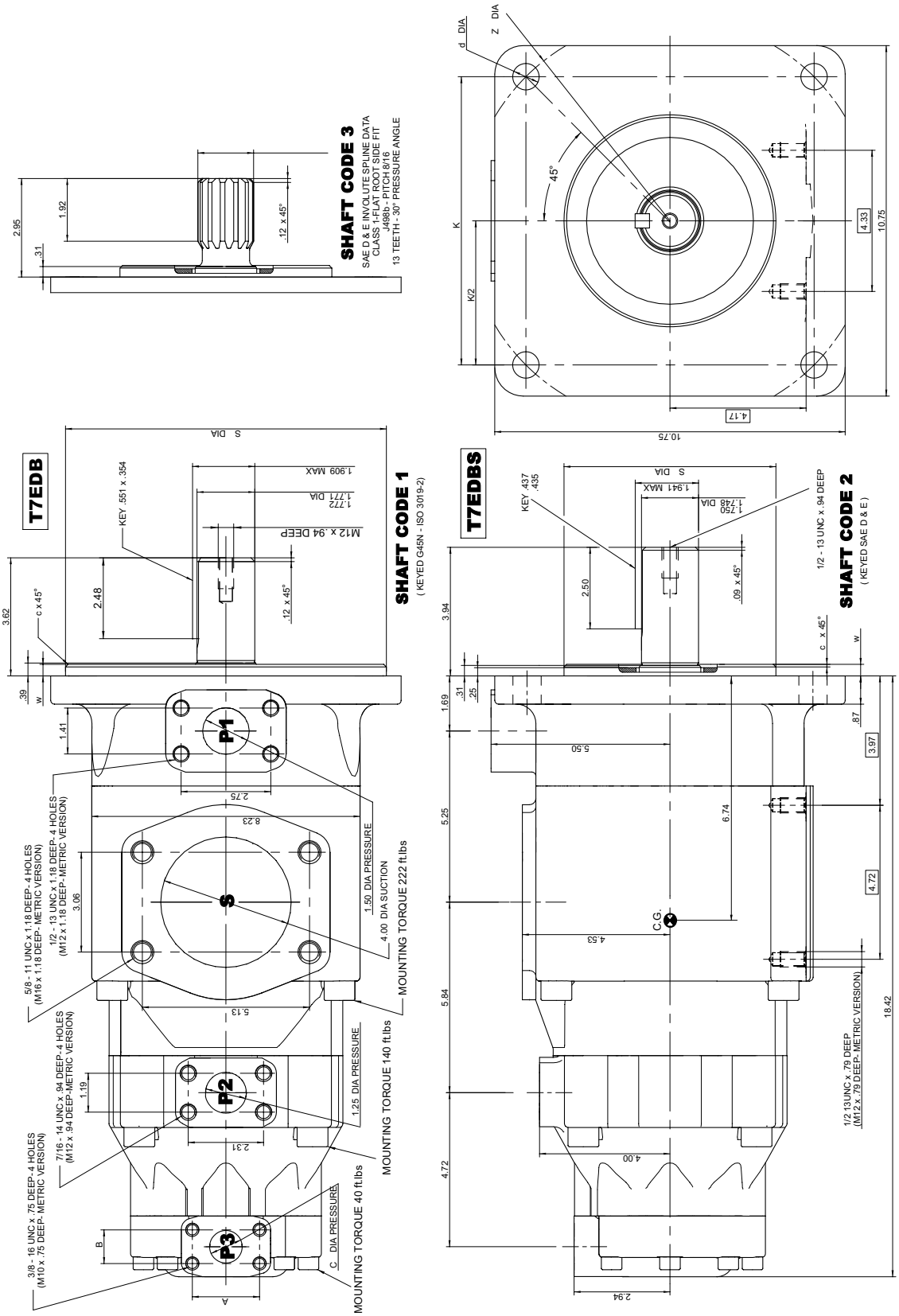

Alternate connect. variables

	00 & M0	01 & M1
A	2.063	1.874
B	1.031	.874
C	1.000	.748

Alternate mounting flange

Series	S Dia		e x 45°	W	K	Z Dia	d Dia
	Max.	Min.					
T7EDB	9.842	9.840	.079	.354	-	12.401	.866
T7EDBS	6.500	6.498	.079	.354	8.838	-	.811

Shaft torque limits [in^3/rev. x PSI]

Shaft	Vi x p max. P1 + P2 + P3
1	101506
2	104818
3	112312

Back To The Table Of Content

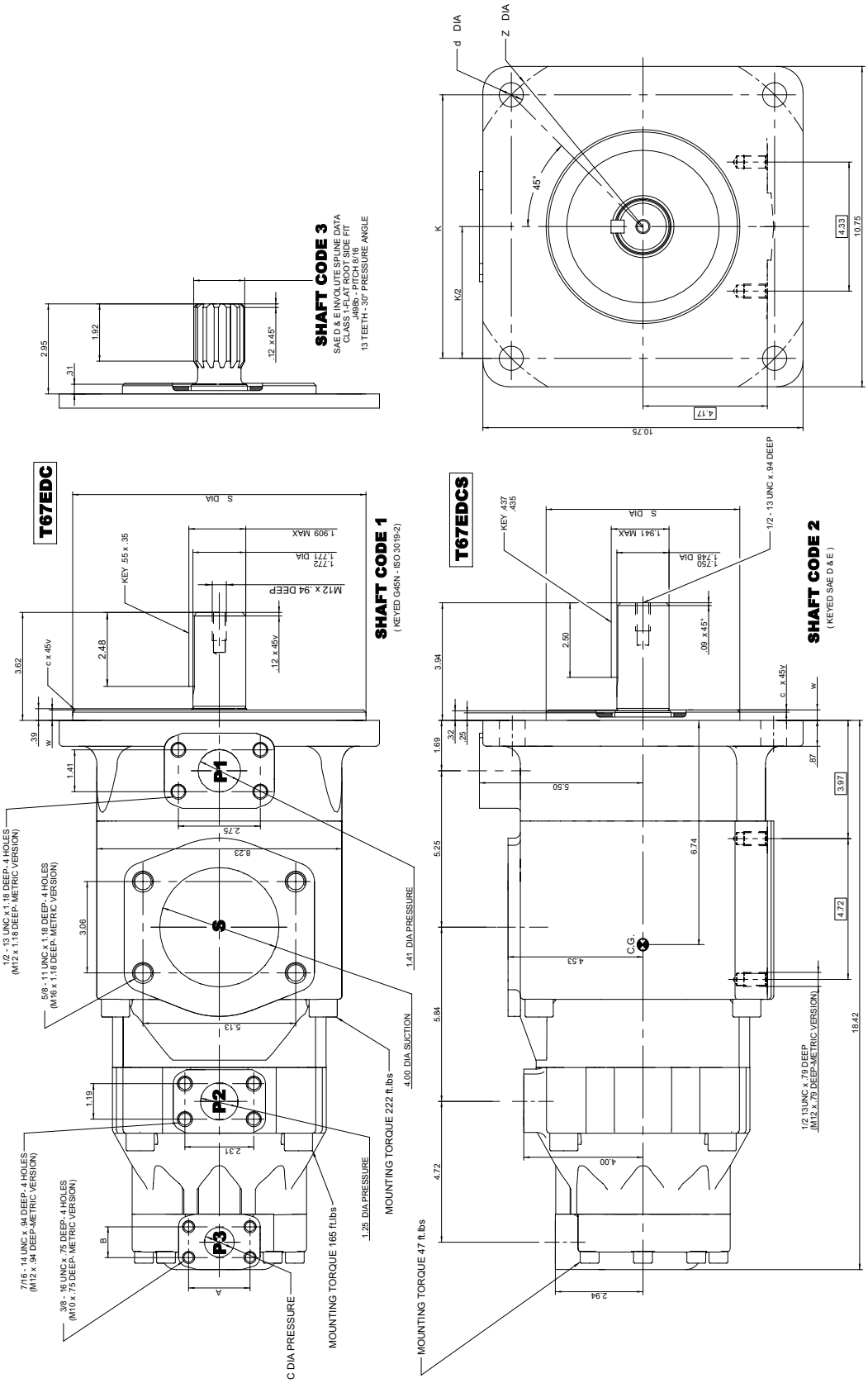

Shaft torque limits [in^3/rev. x PSI]	
Shaft	Vi x p max. P1 + P2 + P3
1	101506
2	104818
3	112312

Alternate mounting flange								
Series	S Dia		e x 45°	W	K	Z Dia	d Dia
	Max.	Min.					
T7EDC	9.842	9.840	.079	.354	-	12.401	.866
T7EDCS	6.500	6.498	.079	.354	8.838	-	.811

Alternate connect. variables		
	00 & M0	01 & M1
A	2.063	1.874
B	1.031	.874
C	1.000	.748

Back To The Table Of Content

Model No. **T67EDC or T67EDCS - 062 - B35 - 010 - 1 R 00 - A 1 - M1 - ..**

T67EDC series - 250-B4 HW
ISO 4 bolts 3019-2 mounting flange
T67EDCS series - SAE E
Mounting flange J744

P1 P2 P3

Displacement for "P1"
Volumetric displacement (in^3/rev)

042 = 8.07	057 = 11.18
045 = 8.70	062 = 12.00
050 = 9.67	066 = 13.00
052 = 10.00	072 = 13.86
054 = 10.43	085 = 16.40

Displacement for "P2"
Volumetric displacement (in^3/rev)

B14 = 2.68	B31 = 6.05
B17 = 3.36	B35 = 6.92
B20 = 4.03	B38 = 7.36
B22 = 4.29	B42 = 8.39
B24 = 4.95	045 = 8.89
B28 = 5.49	050 = 9.64

Displacement for "P3"
Volumetric displacement (in^3/rev)

003 = .66	017 = 3.56
005 = 1.05	020 = 3.89
006 = 1.30	022 = 4.29
008 = 1.61	025 = 4.84
010 = 2.08	028 = 5.42
012 = 2.26	031 = 6.10
014 = 2.81	

Modifications

Mounting w/connection variables
4 bolts SAE flanges J518

P1 = 1"1/2 - P2 = 1"1/4 - S = 4"		
Type	UNC	Metric
T67EDC - P3 = 1"		M0
T67EDC - P3 = 3/4"		M1
T67EDCS - P3 = 1"	00	M0
T67EDCS - P3 = 3/4"	01	M1

Seal class
1 = S1 (for mineral oil)
4 = S4 (for the resistant fluid)
5 = S5 (for mineral oil and fire resistant fluids)

Design letter

Porting combination
00 = standard

Direction of rotation (view on shaft end)
R = Clockwise
L = Counter-clockwise

Type of shaft T67EDC
1 = keyed (G45N - ISO 3019-2)

Type of shaft T67EDCS
2 = keyed (SAE D & E)
3 = splined (SAE D & E)

OPERATING CHARACTERISTICS – TYPICAL [115 SUS]

Pressure port	Series	Volumetric displacem. Vi	Flow q_{Ve} [GPM] & n = 1800 RPM			Input power P [HP] & n = 1800 RPM		
			p = 0 PSI	p = 2000 PSI	p = 3500 PSI	p = 100 PSI	p = 2000 PSI	p = 3500 PSI
P1	042	8.07 in^3/rev	62.92	60.37	58.52	8.09	78.44	133.80
	045	8.70 in^3/rev	67.72	65.17	63.32	8.37	84.04	143.60
	050	9.67 in^3/rev	75.38	72.83	70.98	8.82	92.97	159.24
	052	10.00 in^3/rev	78.37	75.82	73.97	8.99	96.47	165.36
	054	10.43 in^3/rev	81.27	78.72	76.87	9.17	99.75	177.46
	057	11.18 in^3/rev	87.12	84.57	82.72	9.51	106.57	189.84
	062	12.00 in^3/rev	93.54	90.99	89.14	9.88	114.17	196.34
	066	13.00 in^3/rev	101.44	98.89	97.04	10.34	123.38	212.46
	072	13.86 in^3/rev	108.00	105.45	103.60	10.72	131.04	225.86
	085	16.40 in^3/rev	127.79	126.13 1)	-	11.88	101.66 1)	-
			p = 0 PSI	**p = 2000 PSI**	**p = 3630 PSI**	**p = 100 PSI**	**p = 2000 PSI**	**p = 3630 PSI**
P2	B14	2.68 in^3/rev	20.92	19.18	17.81	3.46	27.77	47.03
	B17	3.36 in^3/rev	26.16	24.41	23.04	3.77	33.88	57.71
	B20	4.03 in^3/rev	31.39	29.64	28.27	4.07	39.98	68.39
	B22	4.29 in^3/rev	33.43	31.69	30.32	4.19	42.37	72.57
	B24	4.95 in^3/rev	38.57	36.82	35.45	4.49	48.36	83.06
	B28	5.49 in^3/rev	42.80	41.06	39.69	4.74	53.30	91.70
	B31	6.05 in^3/rev	47.18	45.43	44.06	4.99	58.41	100.63
	B35	6.92 in^3/rev	53.93	52.18	50.81	5.39	66.29	114.42
	B38	7.36 in^3/rev	57.35	55.61	54.24	5.59	70.28	121.42
	B42	8.39 in^3/rev	65.39	63.65	62.28	6.05	79.66	137.83
	045	8.89 in^3/rev	69.29	67.11	65.31	6.74	83.75	145.79
	050	9.64 in^3/rev	75.14	72.96	71.78 2)	7.08	90.58	134.50 2)
			P = 0 PSI	**p = 2000 PSI**	**p = 4000 PSI**	**p = 100 PSI**	**p = 2000 PSI**	**p = 4000 PSI**
P3	003	.66 in^3/rev	5.14	3.85	-	2.11	8.45	-
	005	1.05 in^3/rev	8.18	6.89	5.68	2.29	12.00	19.81
	006	1.30 in^3/rev	10.13	8.84	7.63	2.40	14.28	23.79
	008	1.61 in^3/rev	12.55	11.26	10.05	2.54	17.11	28.75
	010	2.08 in^3/rev	16.22	14.93	13.71	2.76	21.38	36.22
	012	2.26 in^3/rev	17.64	16.35	15.14	2.84	23.05	39.14
	014	2.81 in^3/rev	21.88	20.59	19.37	3.09	27.99	47.78
	017	3.56 in^3/rev	27.73	26.44	25.22	3.43	34.81	59.73
	020	3.89 in^3/rev	30.34	29.05	27.84	3.58	37.86	65.07
	022	4.29 in^3/rev	33.43	32.14	30.93	3.76	41.47	71.38
	025	4.84 in^3/rev	37.71	36.42	35.21	4.01	46.46	80.12
	028	5.42 in^3/rev	42.23	40.94	40.32 2)	4.27	51.74	76.73 2)
	031	6.10 in^3/rev	47.56	46.27	45.65 2)	4.58	57.95	86.06 2)

- We do not recommand to use this 003 at 4000 PSI & 1500 RPM as the internal leakage is over 50 % of theoretical flow.
1) 085 = 1300 PSI max. int. 2) 050 – 028 - 031 = 3000 PSI max. int.

Back To The Table Of Content

INTERNAL LEAKAGE (TYPICAL)

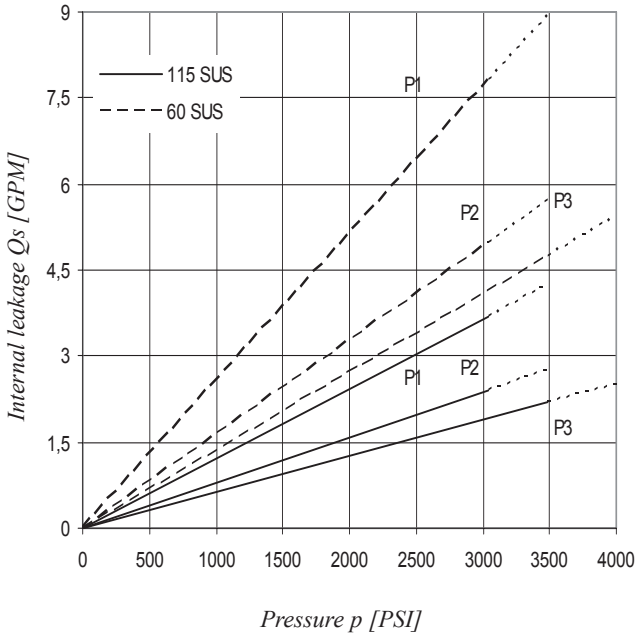

Do not operate pump more than 5 seconds at any speed or viscosity if internal leakage is higher than 50% of theoretical flow. Total leakage is the sum of each section loss at its operating conditions.

NOISE LEVEL (TYPICAL)
T67EDCS - 062 - B35 - 022

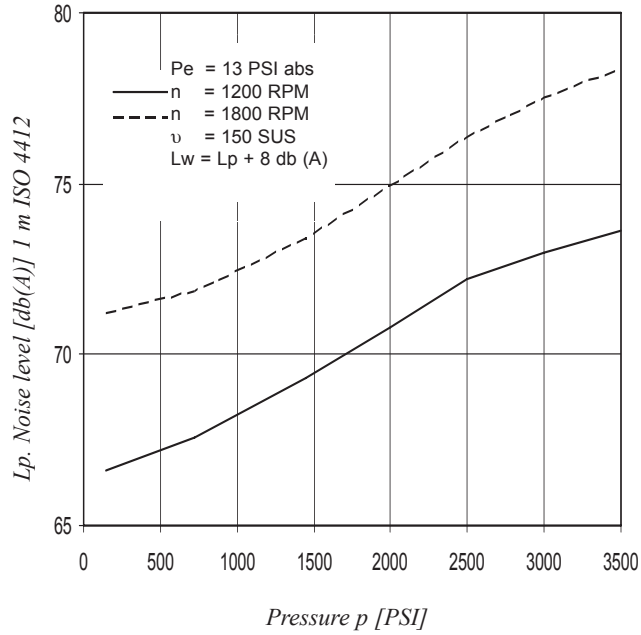

Triple pump noise level is given with each section discharging at the pressure noted on the curve.

HYDROMECHANICAL POWER LOSS (TYPICAL)

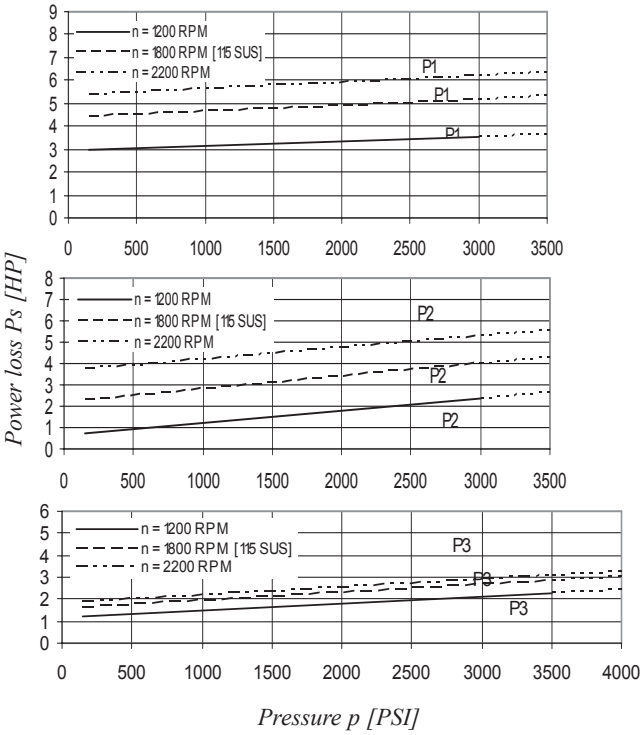

Total hydromechanical power loss is the sum of each section at its operating conditions.

PERMISSIBLE RADIAL LOAD

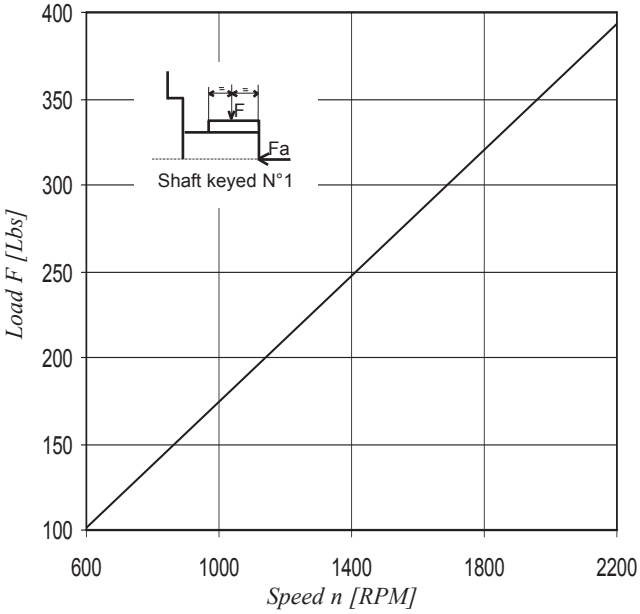

Maximum permissible axial load Fa = 449 Lbs

Back To The Table Of Content

T7BB/T7BBS

T6CC

T67CB

T7DB/T7DBS

T67DC

T7EB/T7EBS

T67EC

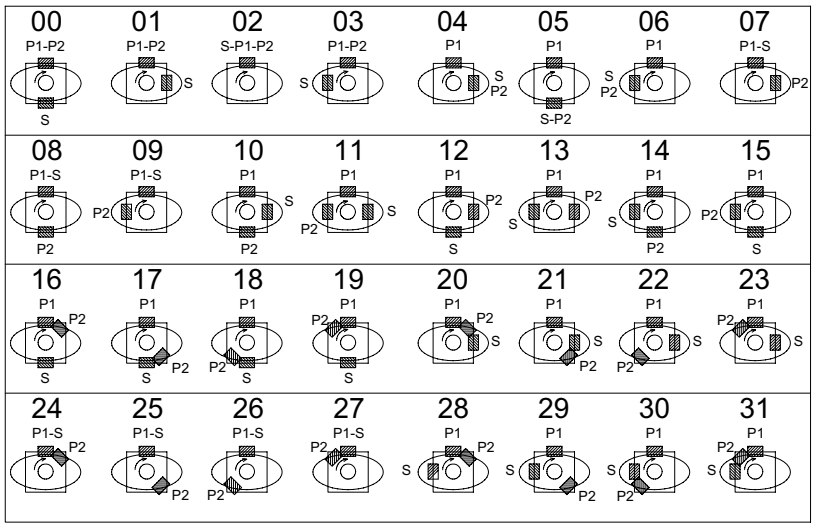

T7DD/T7DDS

T7ED/T7EDS

T7EE/T7EES

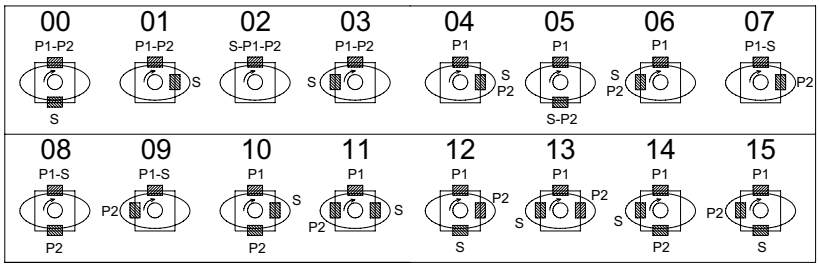

T67DBB

T67DCB

T67DCC

T7DDB/T7DDBS

T67DDCS

T7EDB/T7EDBS

T67EDC/T67EDCS

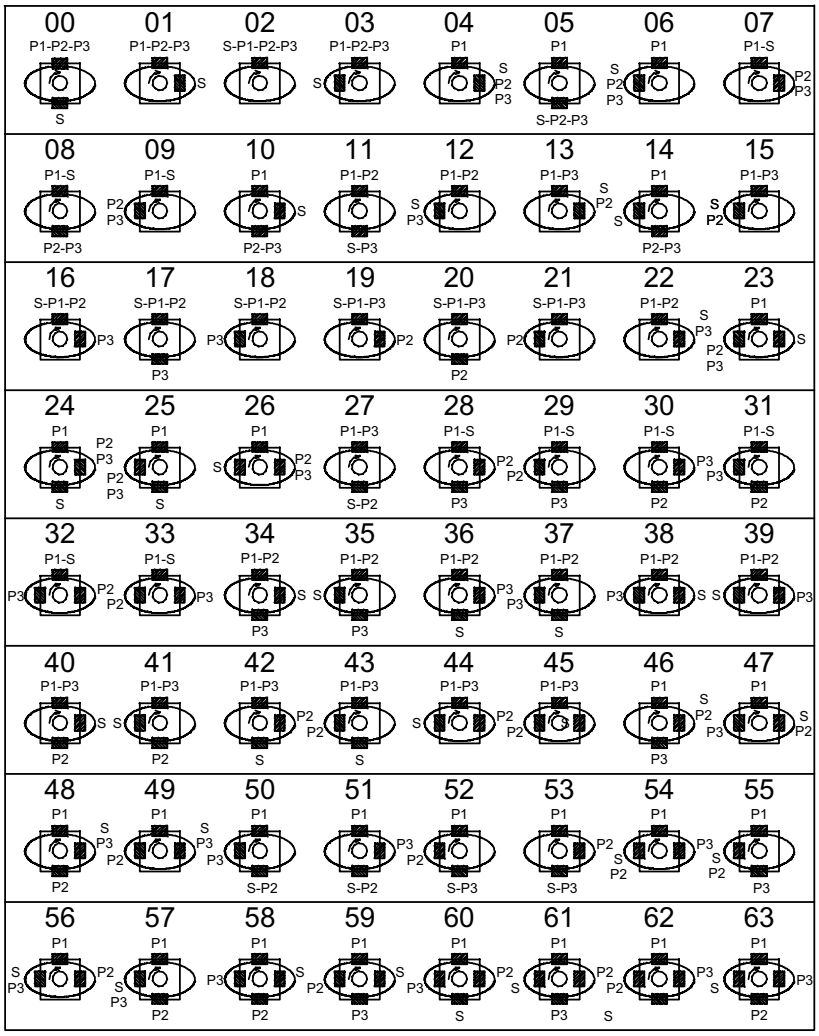

Back To The Table Of Content

T67DBB

T67DCB

T67DCC

T7DDB/T7DDBS

T67DDCS

T7EDB/T7EDBS

T67EDC/T67EDCS

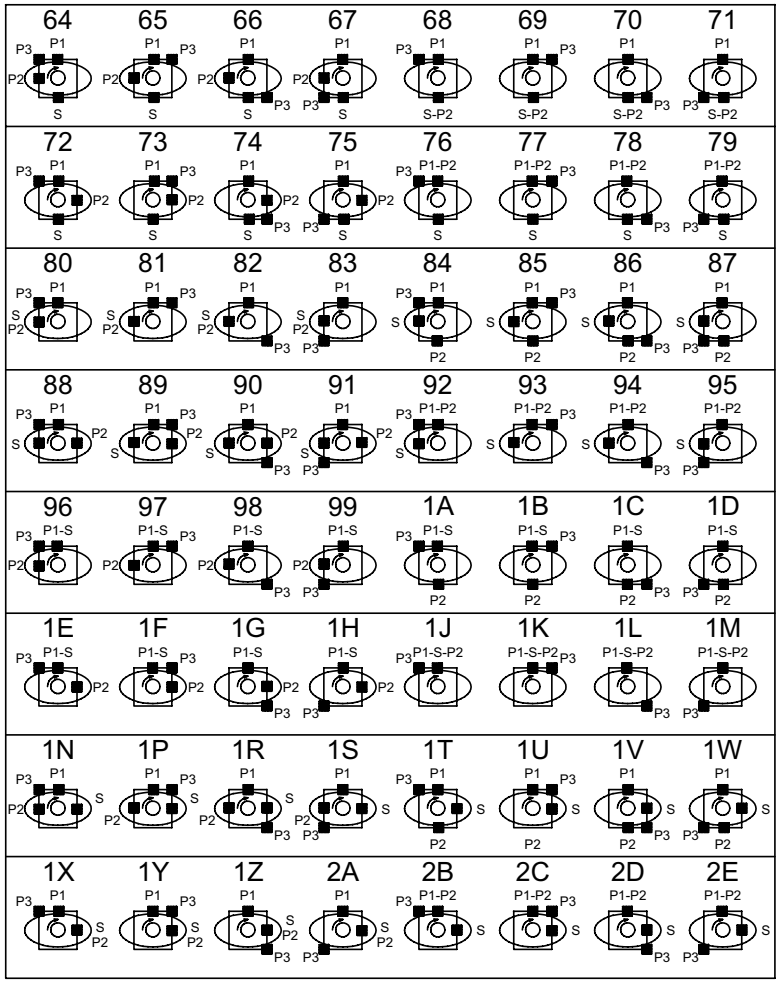

P1

S	P2	P3				P2	P3			
		02	16	17	18		20	30	08	31
		19	07	28	32		21	33	29	09
		01	22	34	38		40	48	10	58
		13	04	46	47		45	49	59	23
		00	36	11	37		27	51	05	50
		42	24	53	60		43	62	52	25
		03	39	35	12		41	63	14	57
		44	26	61	56		15	54	55	06

Back To The Table Of Content